UNIVERSAL 4K DVR

UHD1604F-U

UNIVERSAL I Analog I Digital I IP I 4M QHD I 4K UHD I TDM RX

Key Features

- Support all video format
- Support Max. 16ch(2M), 8ch(4M), 4ch(4K UHD)
- Support TDM Video
- 4K UHD(HDMI) output
- 6 Internal SATA HDDs
- External storage capacity 128TB(eSATA), 256TB(NS04R)
- Real Time Streaming(RTSP)
- Service channel, Remote DVR
- VMS(Control Center), Mobile App, HTML5

Dimension

(445×418×88mm)

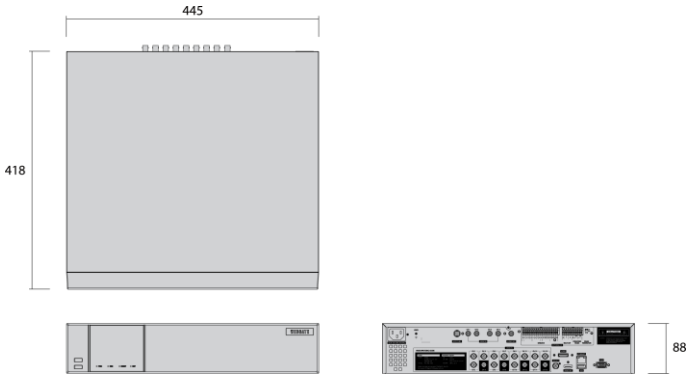

Tech Note

UNIVERSAL Support all kinds of existing video formats

From SD to UHD, including IPC, the Universal 4K DVR support all kinds of video formats
The Universal 4K DVR is the optimum solution for any site, any camera

4K UHD More Vivid & Sharper with Ultra High Definition

4K UHD is perfect for large area coverage and identifying objects at great distances
DVR supports 4M QHD (2x greater than Full-HD) and 4K UHD (4x greater than Full-HD) recording

TDM(Time Division Multiplexer) Transmit 8ch through single cable

Embedded TDM RX(EX-SDI) receives max 8ch video with single cable

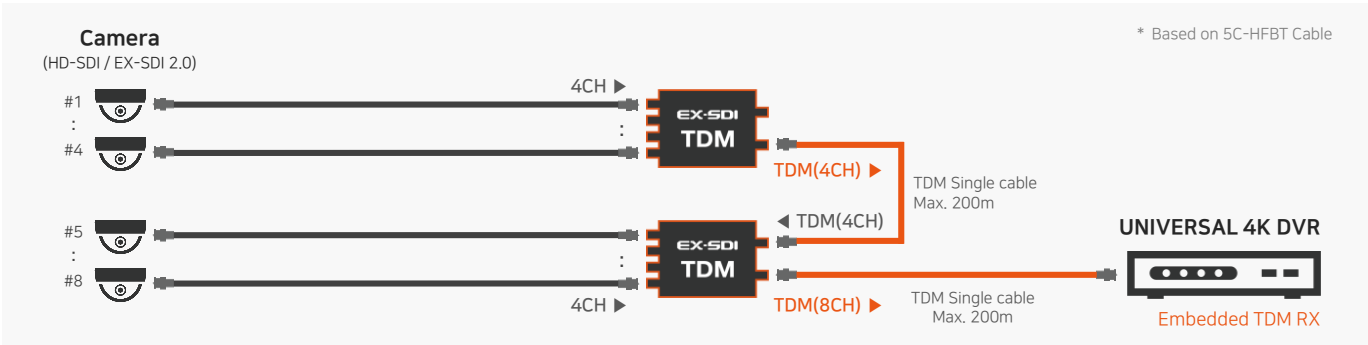

No.1 Integrated Video Security Solution

WEBGATE

DVR CAMERA ACCESSORY SOFTWARE

UNIVERSAL 4K DVR

UHD1604F-U

VIDEO INPUT		
Video input Format	BNC	HD-SDI, EX-SDI(V1.0, V2.0, V2.1), TDM
		AHD, TVI, CVBS(960H, SD)
	IP(Ethernet)	Onvif, WESP
Resolution / Frame Rate	HD-SDI EX-SDI 1.0 EX-SDI 2.0 EX-SDI 2.1	1920×1080@30fps 2560×1440@30fps 3840×2160@30fps
	EX-SDI TDM	1920×1080@30fps
	AHD	1920×1080@30fps 2560×1440@30fps
	TVI	1920×1080@30fps
	CVBS(960H)	960×480@60i, 720×480@60i 960×576@50i, 720×576@50i
Connectors		16ch, 75Ω BNC connector
CoC		Control over Coax@AHD(2M, 4M), TVI(2M)
VIDEO OUTPUT		
Video output	Resolution	HDMI : 3840×2160, 1920×1080 VGA : 1920×1080, 1280×1024, 1024×768 800×600 BNC(EX-SDI) : 1920×1080 BNC(CVBS) : 720×480, 720×576
	Mode	HDMI/VGA Main + CVBS Spot HDMI/SDI Main + CVBS Spot HDMI Main + VGA Spot + CVBS Spot HDMI Main + SDI Spot + CVBS Spot
	BNC(CVBS)	1, 4, 9, 16 split-screen, Switching
	BNC(SDI)	Main : Same as HDMI output Spot : 1, 4, 9, 16 split-screen, Switching Format : HD-SDI, EX-SDI, EX-SDI 2.0
RECORDING		
Compression	H.264 / JPEG	
Resolution	3840×2160, 2560×1440, 1920×1080, 1280×720, 960×480	
Rate	Max. 480fps@1920×1080, Max. 240fps@2560×1440 Max. 120fps@3840×2160	
Quality	10 levels up to 8Mbps@2M, 12Mbps@4M, 16Mbps@8M(4K)	
Mode	Normal/Event Record, Schedule/Event Record, Emergency Record	
Schedule	24hrs / 7days	
PLAYBACK		
Mode	Instant Playback / Search	
Speed	Max. 480fps@1920×1080 Max. 240fps@2560×1440 Max. 120fps@3840×2160	
Search type	Date/Time, Calendar/Time-line, Event, Thumbnail(Interval/Motion), Text, Bookmark	
Block playback	24hours ~ 99days	
EVENT & ALARM		
Event source	MD(Motion Detection), Sensor, Text, Video Loss	
Event check Schedule	24hrs / 7days	
Event action	Relay, Buzzer, E-mail, FTP, Video pop-up, Camera Preset, Mobile Alarm Push	
MD area	15×10	
Text input	POS/ATM support, AVE VSI Pro/Hydra support	
SYSTEM ALARM		
Alarm source	HDD fail, HDD almost full, Password fail, WRS fail, Record Fail	
Alarm action	Warning message, Buzzer, E-mail, Relay, Mobile Alarm Push	
AUDIO		
Input/output	4 RCA input / HDMI & RCA output	
Compression	ADPCM (32Kbps, 8KHz, 16bit sampling)	
Direction	Both	

PTZ	
Protocols	HIK-C, AHD, C1080(D1080), C1080PT-Z20, Pelco-D, Pelco-P, Samsung, Panasonic and others
NETWORK	
Interface	1 Gigabit Ethernet (10/100/1000Mbps)
Type	Static IP, Dynamic IP, xDSL
DDNS	WNS, DynDNS, NoIP, WRS
Bandwidth limit	0.01 ~ 100Mbps, unlimited
NTP	Server / Client / Both
Users	10 Monitoring, 4 Playback
RTSP	Supported
UPnP	UPnP auto port forwarding
Streaming	H.264 stream, High resolution
	1 additional H.264 stream, Normal resolution
	1 JPEG stream, Normal resolution
Service Streaming	Service Channel or Remote DVR
SECURITY	
User level	1 admin, 10 users
User privilege	Menu, PTZ, Relay, Playback, Power, Copy, Network MIC
IP filtering	Supported
STORAGE & BACKUP	
Storage devices	6 internal SATA HDDs, 1 external eSATA Interface, Gigabit network for NS04R
RAID Level	External storage including NS04R(Level 1/5/10)
File system	Proprietary file system, Data-loss protection against power-failure
Capacity	Max. 128TB with eSATA, Max. 256TB with cascaded NS04R 8TB HDD Supported
Backup type	Multi-channel exe file, Single channel avi file, JPEG(Capture)
Backup device	3 USB 2.0 drive (2 front, 1 rear)
S.M.A.R.T.	Temperature and Health checking
SERIAL & I/O	
Serial port	2 RS-485
Sensor input	16 Dry-contacts
Relay output	2 Relays
CONTROLLER	
Device	IR remote controller, Joystick Keyboard, Mouse
SOFTWARE	
WebViewer	Plug-in free HTML5 WebViewer for Chrome, Safari, Mac OS X ActiveX WebViewer for IE
Mobile App	Monitoring / Playback / Alarm Push / PTZ / Audio / Log View with iPhone & Android
CMS	Control Center, Max. 1024 units
SDK	ActiveX(COM) SDK
ENVIRONMENTAL & PHYSICAL	
Dimension	445(W) × 418(D) × 88(H) mm
Weight	6 Kg (No HDD)
Operating Temperature	5°C~45°C (41°F ~ 113°F)
Operating Humidity	80% below, free of condensation
Power	AC free volt (100~240VAC), 50/60Hz
Power Consumption	Max. 33W, Typical 26W(No HDD)
Approval	KC, FCC, CE, RoHS

* Specifications are subject to change without notice for product improvement.