EC40E0W六视图

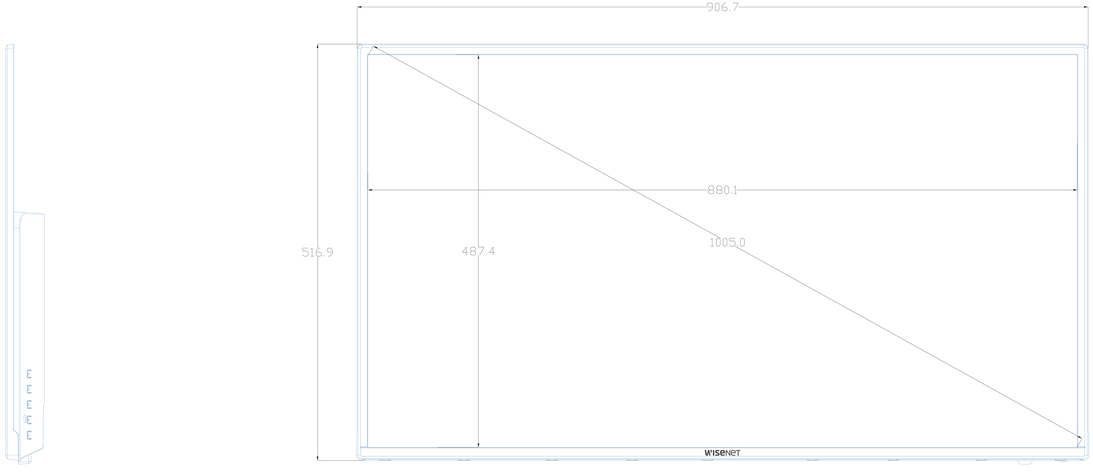
906.7
880.1
1005.0
516.9
487.4
WISENET

9.8
47.8
38.0

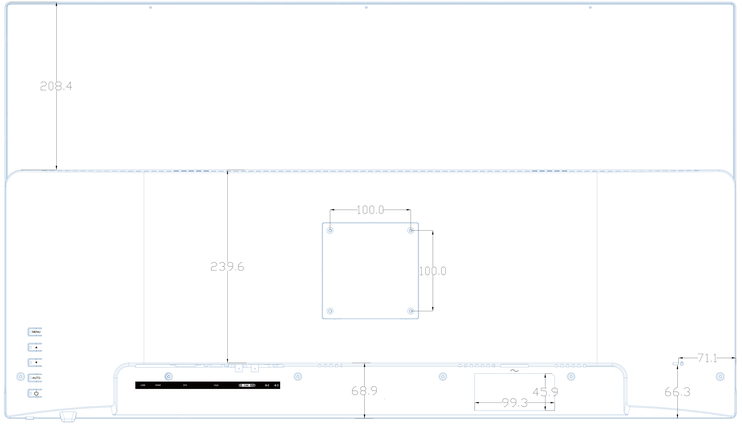
208.4
100.0
100.0
239.6
71.1
68.9
45.9
99.3
66.3

47.8

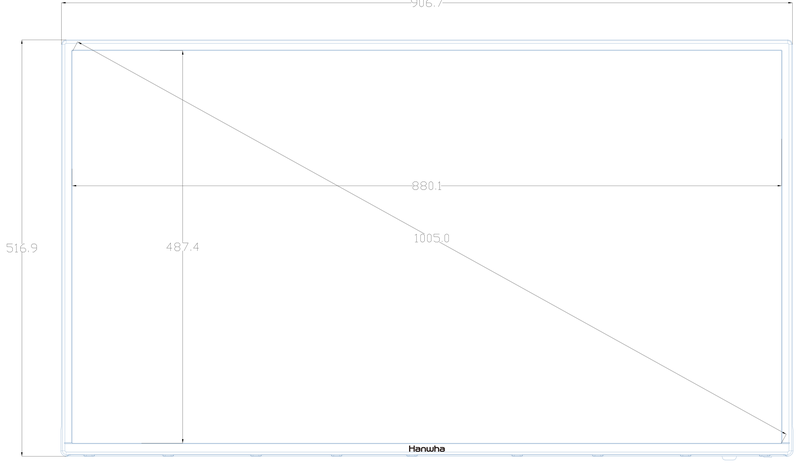
906.7
880.1
1005.0
516.9
487.4
Hanwha