Collamat® 3600

The multifunctional. With the Collamat® 3600 labelling system you get a perfect solution for any standard application. It is compact, space-saving and easy to operate.
The typical Collamat® modularity allows you to configure the system optimal to your production requirements. Designed for semi or fully automated applications the Collamat® 3600 offers a great solution for smaller productions with demands to long lasting functionality and reliability.

Swiss Modular Labellers

Collamat®
HM GROUP

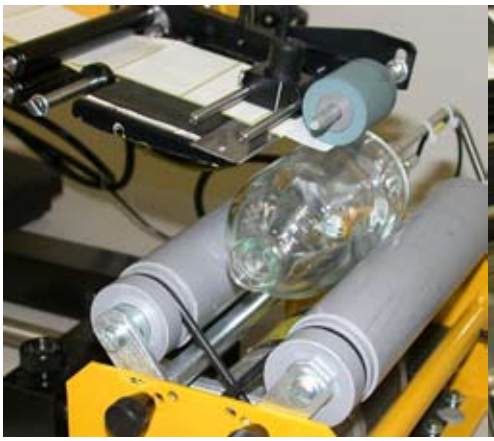

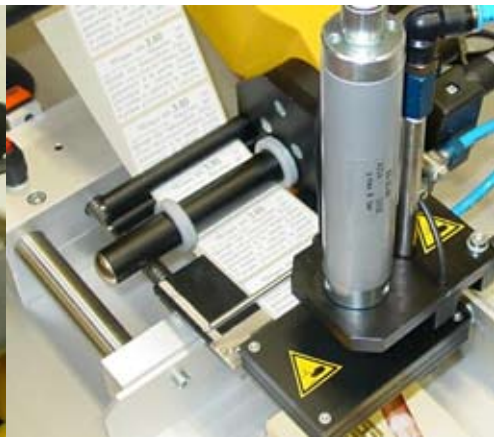

FEATURES

- Flexibility – Wide application range due to the availability of various applicators for specific products
- Collamat® design – Controller, drive unit, rewinder, and operator panel integrated in one space-saving unit
- Expandable – Prepared for communication and installation of printers, hot stamps or ink jets
- Modularity – Easy adaptation to new applications
- Easy operation – Settings can easily be changed by 3 potentiometers
- Modular rail mounting – Easy plug-in expansion for options
- Fast set up – Set parameters for label scanner, predispensing, and application speed – and you are ready to work

TECHNICAL DATA	C3610	C3620
Passing width of label web:	95 mm (3 3/4 in.)	160 mm (6 1/3 in.)
Feeding speed:	3 - 20 m/min (10 - 65 ft/min)	
Labelling accuracy:	± 1 mm (1/25 in.)	
Label length:	10 - 2000 mm (10/25 - 78 3/4 in.)	
Max label reel diameter:	350 mm (14 in.)	
Rewinder:	Integrated in traction unit	
Drive:	2 phase stepper motor	
Control:	Integrated in traction unit. 16 bit microprocessor.	
Settings by potentiometer:	Variable speed adjustment, label scanner sensitivity, pre-dispensing	
Applicator:	Optional: Fix, spring mounted, magnet or others	
Mounting:	Left or right	
Options:	According to separate list	
Voltage:	115–230 V / 50–60 Hz / 110 VA	
Approbation:	CE/Gost	

All data are indicative and may be subject to alteration

©2006 - All IPR's belong to HM Group

HM Collamat AG
Bodenmattstrasse 34
CH-4153 Reinach

Phone: +41 (0)61 756 28 28
Fax: +41 (0)61 756 29 29
Web: www.collamat.ch
E-mail: contact@collamat.ch
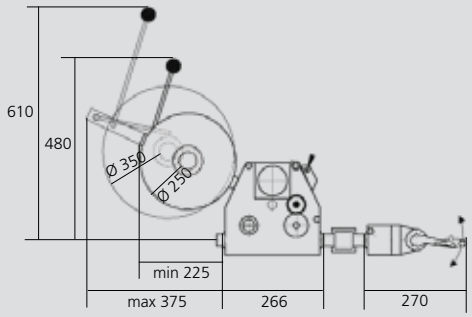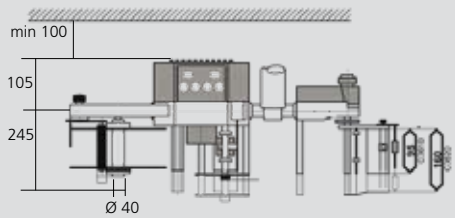
Member of HM Group