NEW!

Complete Installation Guide

TBus®

Sixteen Port PoE+ Receiver Hub
Model NV-ER1816i

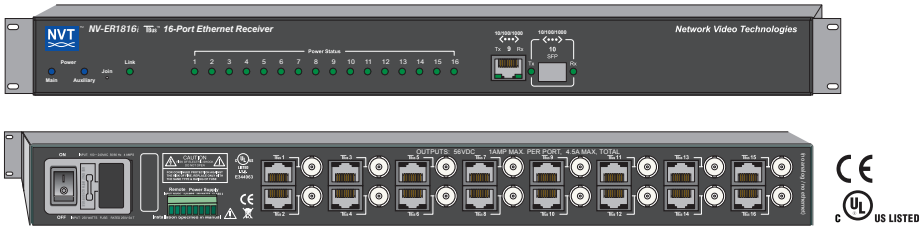

IMPORTANT SAFETY INSTRUCTIONS

1) Read these instructions.

2) Keep these instructions.

3) Heed all warnings.

4) Follow all instructions.

5) Do not use this apparatus near water.

6) Clean only with a dry cloth.

7) Install in accordance with the manufacturer's instructions.

8) Do not install near any heat sources such as radiators, heat registers, stoves or other apparatus that produce heat.

9) Do not defeat the safety purpose of the polarized or grounding-type plug. A polarized plug has two blades with one wider than the other. A grounding type plug has two blades and a third grounding prong. The wider blade or the third prong are provided for your safety. If the provided plug does not fit into your outlet, consult an electrician for replacement of the obsolete outlet.

10) Protect the power cord from being walked on or pinched particularly at plugs, convenience receptacles, and the point where they exit from the apparatus.

11) Only use attachments/accessories specified by the manufacturer.

12) Refer all servicing to qualified service personnel. Servicing is required when the apparatus has been damaged in any way, such as a power supply cord or plug is damaged, liquid has been spilled, or objects have fallen into the apparatus, the apparatus has been exposed to rain or moisture, does not operate normally, or has been dropped. This installation should be made by a qualified service person and should conform to all local codes.

13) Low Voltage Connections: The installation shall be in accordance with the applicable provisions of the National Electrical Code ANSI/NFPA 70, Article 800.90 and Canadian Electrical Code Part 1, Section 60-504.

TO REDUCE THE RISK OF ELECTRICAL SHOCK, DO NOT REMOVE COVER OR BACK. NO USER SERVICEABLE PARTS INSIDE. REFER SERVICING TO QUALIFIED SERVICE PERSONNEL.

WARNING: TO REDUCE THE RISK OF ELECTRICAL SHOCK, DO NOT EXPOSE THIS APPARATUS TO RAIN OR MOISTURE.

⚠ This installation should be made by a qualified service person and should conform to all local codes.

⚠ WARNING - Do not install the unit in an environment where the operating ambient temperature exceeds 122° F (50° C). The ventilation should not be impeded by covering the unit with items, such as newspapers, table-cloths, curtains, etc. No naked flame sources, such as lighted candles should be placed on the apparatus.

⚠⚠ WARNING - Do not interconnect multiple power supply outputs. **Never use more than two power supplies within a TBus channel. Never use more than one 60 watt remote power supply on each TBus channel.** Do not connect additional loads which would exceed the marked output current rating of the power supply.

⚠ WARNING - The apparatus shall not be exposed to dripping or splashing and no objects filled with liquids, such as vases, shall be placed on the apparatus.

⚠ WARNING - Use only a Certified power cord and plug (coupler / mains) assemblies for location installed.

⚠ WARNING - Power cord is regarded as main disconnect.

⚠ WARNING - The appliance coupler (power cord/ mains) shall remain readily operable. Its socket-outlet must be installed near the equipment and shall be easily accessible.

⚠ WARNING - For safety, never put NVT signals in the same conduit as high-voltage wiring.

Each of the TBus outputs are 56VDC, class2 (SELV). Each are current-limited to deliver not more than 1A.

The NV-ER1816i TBus Receiver Hub, and its NV-PS56-250W auxiliary power supply when provided, are each in a 1U rackmount enclosure. Each is provided with an IEC380-C14 power inlet and UL approved type SPT-2, SVT, or SJT, 18/3 AWG Min. 300VAC, 60° C Max 6 ft (1.8 m) line-cord. One end with IEC380-C13 appliance coupler and the other end with NEMA 1015P or equivalent for your country.

Input Voltage is 100 ~240 VAC 50-60 Hz

UL Listed to IEC/UL 60950-1 Complies with FCC part 15A limits

Network Video Technologies
(+1) 650.462.8100 • +44 (0) 208 977-6614
nvt.com • info@nvt.com

NEW!

Complete Installation Guide

TBus®

Sixteen Port PoE+ Receiver Hub
Model NV-ER1816i

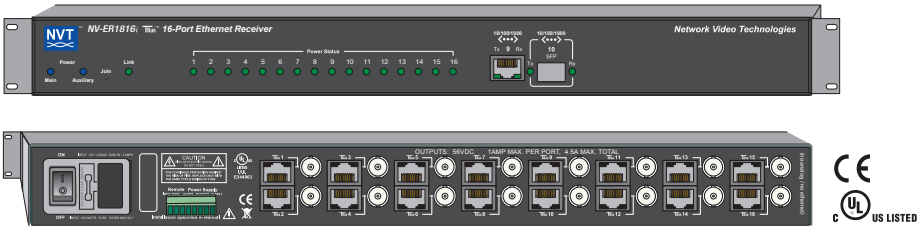

PRODUCT OVERVIEW

- 100 BaseT transmision; Network speeds up to 150 Mbps*; Up to 8,000ft (2,500m)*
- Powers PoE, PoE+, or High Power PoE cameras (or other PoE devices), up to 50 watts*
- Dual 1000BaseT uplink ports (RJ45 & SFP)
- Use with NV-ET1801 or NV-ET1804 TBus Transmitters
- One TBus port at the network-end can support multiple remote Transmitters/IP cameras
- 56 VDC is distributed over the TBus to all connected equipment
- Easy configuration, no PC required; Browser based moitoring & control available
- Transparently supports all networking protocols (UDP, TCP/IP, HTTP, Multicast*, etc.)
- 128-bit AES encrypted transmission; Built-in transient protection

The NVT Model NV-ER1816i TBus Sixteen Port PoE+ Receiver Hub is a 1U 19” rack-mountable bus-architected ethernet switch, that together with remote TBus transmitters, is capable of supporting up to 64 10/100 BaseT Ethernet and PoE+ powered devices.

The TBus transmission medium can be coax, 2-wire/UTP, or Shielded Twisted-Pair. Data rates up to 150 Mbps are achievable, making these devices the ideal choice in new or legacy installations where existing cable is re-deployed as part of an upgrade to IP cameras.

An internal 250 watt 56 VDC power supply can be optionally augmented by an external 250 watt auxiliary power supply, supporting redundancy and/or higher power applications.

The NV-ER1816i is backed by NVT’s award winning customer suooprt, limited lifetime warranty, and advance replacement. No IP or MAC addressing configuration is required, yet is available for browser-based monitoring and control. This provides exceptional yet simple configuration and diagnostics for the installer or remote monitoring facility. Status LEDs indicate power, Ethernet/PoE, and TBus connectivity/activity.

* Distance and number of devices supported may be lower due to power supply capacity and wire voltage-drop. See Wire Distance Charts on page 8. Aggregate TBus bandwidth is dynamically allocated (shared based on traffic), and decreases with wire distance. See Wire Distance Chart on page 9. Multicast requires an IGMP Querier, either in a network switch, or in the NV-ER1816i Receiver Hub. High bandwidth streaming devices (>15Mbps) that employ unusually “chatty”protocols (TCP/IP, TFTP, etc.) are not recommended. Use RTP/UDP instead.

Network Video Technologies
(+1) 650.462.8100 • +44 (0) 208 977-6614
nvt.com • info@nvt.com

CONFIGURATION INSTRUCTIONS

The NV-ER1816i TBus receiver hub delivers high bandwidth encrypted Ethernet signals over virtually any kind of wire (Coax, UTP, STP, Un-twisted wire, etc.). To provide utmost signal integrity and security, the NV-ER1816i receiver **must be configured** to communicate exclusively with other transceivers within their **TBus Network Group.** This group typically consists of one or more remote Transmitters, typically located at the IP camera and one Receiver, typically located at the control-room. Transmitters may be the NV-ET1801 or NV-ET1804. The Receiver may be the NV-ET1801, NV-ER1804, NV-ER1808i, or NV-ER1816i.

Before functioning on the network, **each NV-ER1816i must learn which other transceivers are to be part of that group.** This simple process is called **Joining**. It is recommended that transceivers in each Network Group be configured **prior to deployment** using these instructions:

Step One: Gather Materials

- All 1800 series Transceivers
- RJ45 patch-cord
- Small paper-clip, partially straightened
- Device labels
- IP Network Documentation Log

Step Two: Connect Hardware

- Remove and discard the "Configure Before Use" labels.
- Use an RJ45 patch to connect the TBus ports of two Transceivers.
  CAUTION: Never connect the RJ45 TBus port to an RJ45 ethernet port.
- Apply power to the Hub.
- The blue POWER LED on each Transceiver will blink for 8 seconds and then go on.
- After 20 seconds, verify that the green TBus Link LED on each transceiver is off.
  If a TBus Link LED is on, the Transceiver has been previously joined.
  Perform the un-joining process below before proceeding.

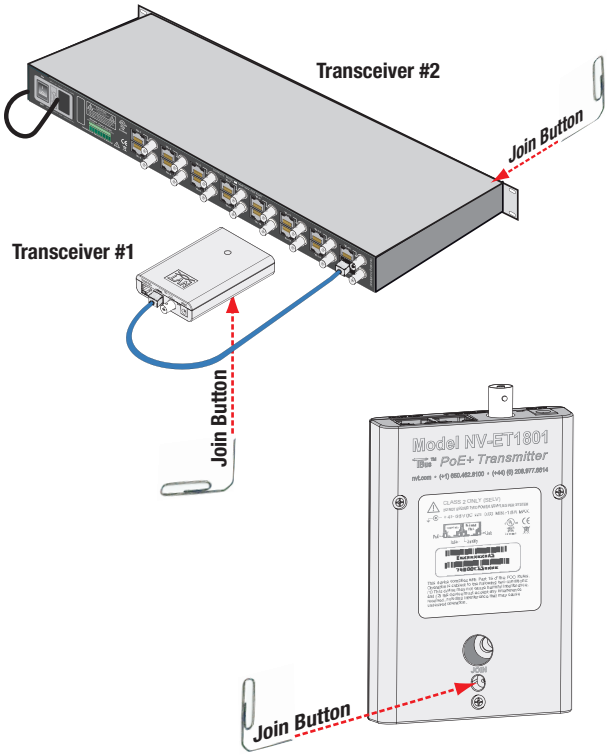

Step Three: Joining

- On Transceiver #1, using the straightened paper-clip, press the small JOIN push-button located on the bottom of the unit for two seconds.
  Its blue Power LED will begin blinking.
- Then press the same push-button on the Transceiver #2 for two seconds.
  Its blue Power LED will begin blinking.
  (The NV-ER1816i also has a web browser-based Join button.)
- Both Transceivers have now entered **Join Mode.**
  They will find each other and establish encrypted communication.
  In about 10 seconds, the blue Power LEDs on both Transceivers will return to a steady on condition, and their green TBus Link LEDs will illuminate, indicating a successful **Join**.
- One TBus Link LED will remain on solid. The other may wink with data.

Step Four: Adding Transceivers (if required)

- Disconnect Transceiver #1 and replace it with a new un-joined Transceiver.
- Repeat steps two and three to add additional Transceivers to the same Network Group.

Step Five: Documentation

- Label the configured Transceivers with a unique Network Group ID of your choice.
  This will help you identify them after they have been deployed.
- Record this Network Group information in your IP Network Documentation Log:
  - Camera Number
  - Camera Position/Location
  - Camera Make & Model
  - Camera MAC & IP Address
  - Camera Login & Password
  - Camera-end NVT Transceiver MAC Address
  - NVT Transceiver Network Group Name
  - Control Room NVT Transceiver MAC Address
  - Control Room Router Port Number

  This log may include essential documentation which will help you identify all system devices during and after deployment. The NV-ER1816i has data entry fields for this purpose.

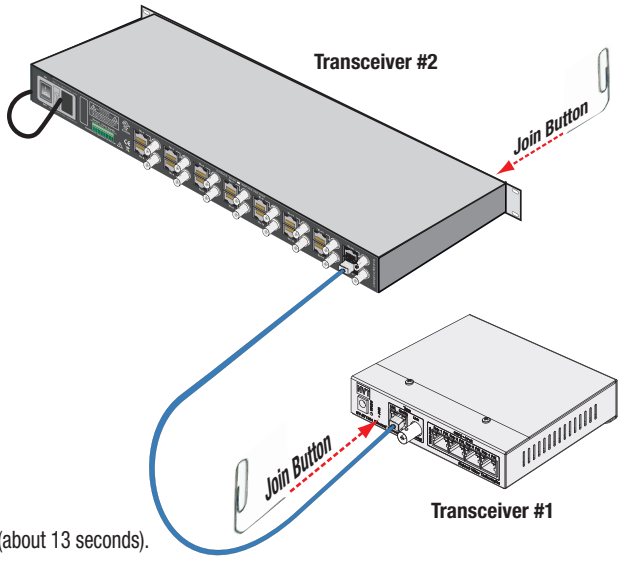

Un-Joining a Transceiver

If you need to move a Transceiver from one Network Group to another, it must first un-learn its previous Network Group and be returned to an un-joined state. Do this by:

- Apply power.
- The blue POWER LED on each Transceiver will blink for 8 seconds and then go on.
- Using the straightened paper-clip, depress the small JOIN push-button until the blue Power LED goes off (about 13 seconds).
- Un-joining is now complete.

If you are not sure that un-joining has been successful, remove and then re-apply power, and repeat.

Network Video Technologies
(+1) 650.462.8100 • +44 (0) 208 977-6614
nvt.com • info@nvt.com

RACK MOUNT INSTRUCTIONS

Rack Mounting

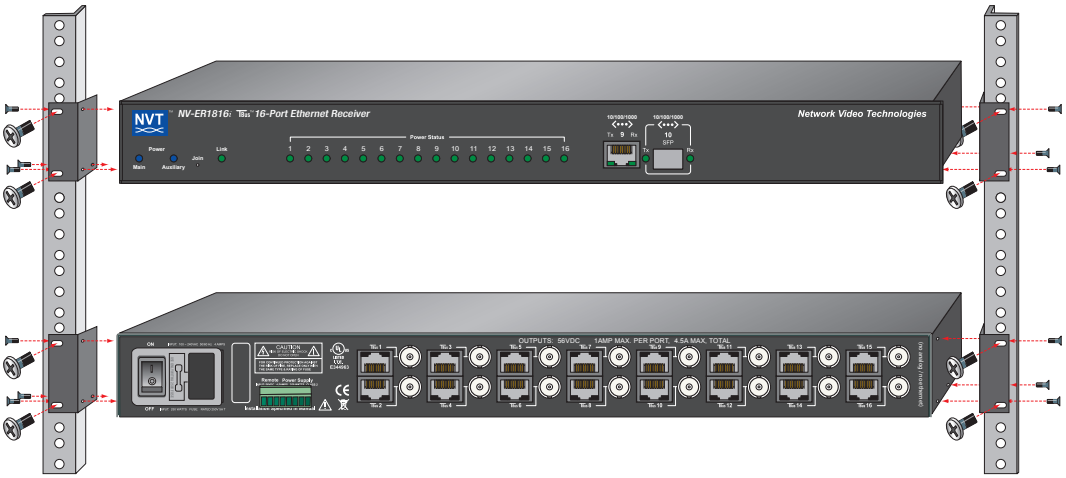

Attach the supplied mounting brackets to the Hub chassis using the supplied screws.

Note that the brackets allow installation with the front or rear facing out.

Care should be taken when installing in a rack environment, specifically:

Elevated Operating Ambient - If the NV-ER1816i is installed in a closed or multi-unit rack assembly, the operating ambient temperature of the rack environment may be greater than room ambient. Therefore, consideration should be given to installing the equipment in an environment compatible with the maximum ambient temperature does not exceed 50°C (122°F).

Reduced Air Flow - Installation of the NV-ER1816i in a rack should be such that the amount of air flow required for safe operation of the equipment is not compromised.

Mechanical Loading - Mounting of the equipment in the rack should be such that a hazardous condition is not achieved due to uneven mechanical loading.

Mains Circuit Overloading - Consideration should be given to the connection of the equipment to the supply circuit and the effect that overloading of the circuits might have on overcurrent protection and supply wiring. Appropriate consideration of equipment nameplate ratings should be used when addressing this concern.

Reliable Earthing - Reliable earthing of rack-mounted equipment should be maintained. Particular attention should be given to supply connections other than direct connections to the branch circuit (e.g. use of power strips).

Wall Mounting

For wall-mount installations, attach the supplied mounting brackets to opposite corners of the Hub chassis using the supplied screws.

Attach the brackets to the wall using wood screws (not supplied).

Table Mounting

For table-mount installations, attach the four rubber feet (supplied) to the bottom of the chassis.

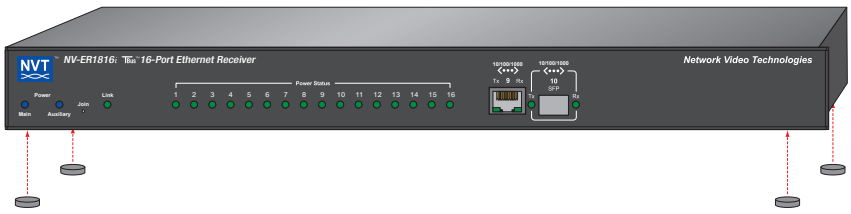

Network Video Technologies
(+1) 650.462.8100 • +44 (0) 208 977-6614
nvt.com • info@nvt.com

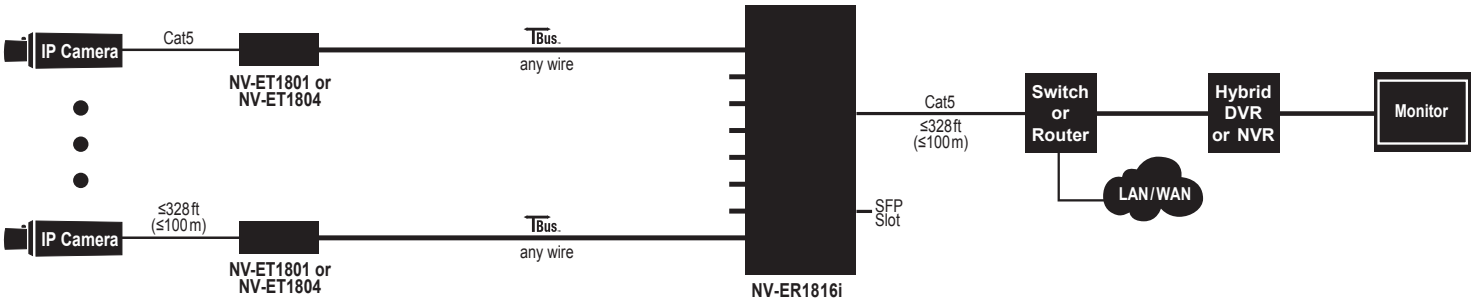

Figure 1 - Typical Installation

Many installations that use the NV-ER1816i receiver hub involve the replacement of an analog camera with an IP camera, while reusing the installed cable to deliver the TBus signal. Since most IP cameras support PoE (Power over Ethernet), the legacy 24VAC distribution may no longer be needed.

⚠ Disconnect all analog equipment from the cable before installing the IP equipment. The NV-ER1816i uses the cable to deliver 56V DC. To prevent damage, never connect analog cameras, analog control-room equipment, or ethernet equipment to a TBus port.

Transceiver Configuration

NVT TBus transceivers **must be configured** to communicate exclusively with other transceivers within their **Network Group.** This "Joining" configuration process is described on page 3.

Connecting the Camera End

Install the new IP cameras. Mount the TBus transmitter (NV-ET1801 or NV-ET1804) nearby. Connect an RJ45 patch cable between the network connector (PoE) of the camera and an Ethernet RJ45 jack on the transmitter. Connect the TBus building wiring to the TBus BNC or RJ45 jack on the transmitter.

For most installations, the IP camera's power will be low enough, and the TBus distance short enough, so that the transmitter and its IP camera can receive power from the NV-ER1816i at the head-end. In most cases, a power supply will not be needed at the camera end. For additional details, see the distance chart on page 8.

Connecting the Control-Room End

Install the NV-ER1816i receiver in a clean dry place, typically in the control-room. Ambient temperature must be between -40 and +122°F (-40 to +50°C). Un-restricted airflow must be at least 4 ft^3 /minute (0.1m^3 / minute).

For rack-mounting, attach the supplied mounting brackets to the TBus Hub chassis using the supplied screws. Note that the brackets allow the Hub to be mounted with either the front or rear facing out.

Connect the TBus wiring from as many as sixteen TBus building locations to the TBus BNC or RJ45 jack on the receiver.

Connect power cord and switch on the NV-ER1816i. This will provide power to the entire system, including the cameras.

The blue "Power" LEDs will begin to blink on the NV-ER1816i as well as all transmitters, indicating initalization. After 10 seconds, the blue LEDs will go on solid, and the green LINK LED will go on indicating that the device has established communication with another TBus transceiver.

Check each channel's power LED status. A correctly connected load will cause the channel's power status LED to be green.

Connect an RJ45 patch-cord between the Ethernet RJ45 jack on the NV-ER1816i and either: 1) an IP camera video input on a Hybrid DVR, or 2) an Ethernet switch allocated for video. Alternately, or in addition, insert an SFP module into the SFP slot, and use this for your uplink, redundant, or daisy-chain backbone connection. See application examples on pages 10 through 13.

For each connected uplink port, the green Ethernet LED will illuminate when the link is established, and will blink when data traffic is present.

The NV-ER1816i has a browser-based Graphical User Interface, which provides optional configuration, parameter monitoring, and diagnostics. See page 15 for details.

Verify Camera End LEDs

Check the LEDs on the transmitter. The blue power LED should be on. The green Link LED should also be on, indicating that the transmitter is communicating with the NV-ER1816i. The Quality LED should be green. An amber LED indicates a weak signal, while a red LED indicates a poor signal.

For each camera connected, the transmitter's green Ethernet LED will illuminate when the Ethernet link is established, and will blink when data traffic is present. If the camera is a PoE device, the green PoE LED will also be on.

BUS ARCHITECTURE

Unlike point-to-point devices that require one device at each end of every cable, TBus transceivers communicate using a bus-architecture.

This means that multiple remote camera-end transmitters may be connected together to one receiver at the control-room. Wire may be star topology, daisy-chained, or any combination.

TBus supports virtually any type of wire, including coax, UTP, STP, even un-twisted wire. And different wire types can be concatenated together, as needed.

Coax cables are connected together using BNC splitters, available from NVT, or elsewhere. If you purchase BNC "T" connectors from another supplier, please purchase high quality connectors. Low cost connectors have been found to have intermittent shield connections.

NV-BNCT

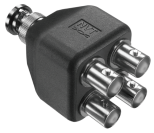

NV-EC4BNC

UTP and STP wire may be connected to either the BNC or the RJ45, whichever is convenient.
NVT has screw-terminal adaptors available for this purpose. These adaptors support up to four sets of wires, each up to 16AWG.

NV-BNCA

NV-RJ45A

NETWORKING CONSIDERATIONS

For IP-based CCTV applications, there are some network configurations that are robust, and others that are not recommended. In general, it is best to deploy a separate LAN exclusively for video traffic. Although it is possible to place IP cameras onto the end-user's "Enterprise LAN", there are several disadvantages in doing so. These include:

Traffic Management Considerations

When sharing the resources of a LAN, the nature of the traffic must be well understood for it to operate efficiently. For most end-users, the business use of their LAN is constantly changing, critical for their day-to-day operations, and not managed by the same group that manages their security. IP video can often consume large amounts of bandwidth, which may or may not be compatible with existing IT traffic.

Security Considerations

Most surveillance systems are installed specifically to protect against breaches in security. A shared LAN provides potential opportunities for unauthorized access to security assets. Sniffing IP addresses can result in the unintended disclosure of IP cameras or network vulnerabilities. Spoofing IP addresses could result in the disruption of recording.

If you must pass IP camera video through "public" LANs, NVT recommends that video be recorded prior to leaving the secure LAN. Then encrypt it by using a Virtual Private Network (VPN) so that neither the video, nor its addressing is readable on the LAN. Many low-cost routers support VPNs.

PoE CONSIDERATIONS

In PoE parlance, the transmitter is known as Power Sourcing Equipment (PSE). It is capable of supporting conventional ethernet, PoE, and PoE+, as well as high power devices up to 50 watts. As such, the transmitter can support an IP camera that employs an ethernet powered P/T/Z/heater/blower.

Unlike conventional PoE, voltage-drop and load current must be confirmed by the installer. For additional details, see the distance chart on page 8.

NVT's Class 2 current limiting ensures safety of the installation during fault conditions, while delivering higher power with more efficient allocation amongst loads. **WARNING: For safety, never use more than two power supplies within a TBus channel. Never exceed 120 watts within a TBus channel. Never use more than one 60 watt remote power supply on each Hub-based TBus channel.**

Although NVT transceivers may be connected to PoE-enabled switch ports, they do not use PoE power from the switch, relying instead on their own higher current 56VDC power sources.

STREAMING PROTOCOL CONSIDERATIONS

Most IP cameras can support multiple video streams using various protocols. MJPEG and H.264 are the most common, and can be transmitted at various rates using unicast (point-to-point) or multicast (single source with multiple destinations).

The NV-ER1816i supports aggregate bandwidths up to 150 Mbps, allowing many devices to operate smoothly on one TBus network. The 150 Mbps bandwidth is dynamically allocated amongst all devices on the TBus network, so care must be taken to not exceed the bandwidth capabilities of the transmission path.

Some protocols, such as TFTP, are particularly 'chatty', meaning they generate a lot of acknowledgements that can easily clog a network. NVT recommends simpler protocols for video transmission, such as RTP over UDP.

MULTICAST PACKET SUPPORT

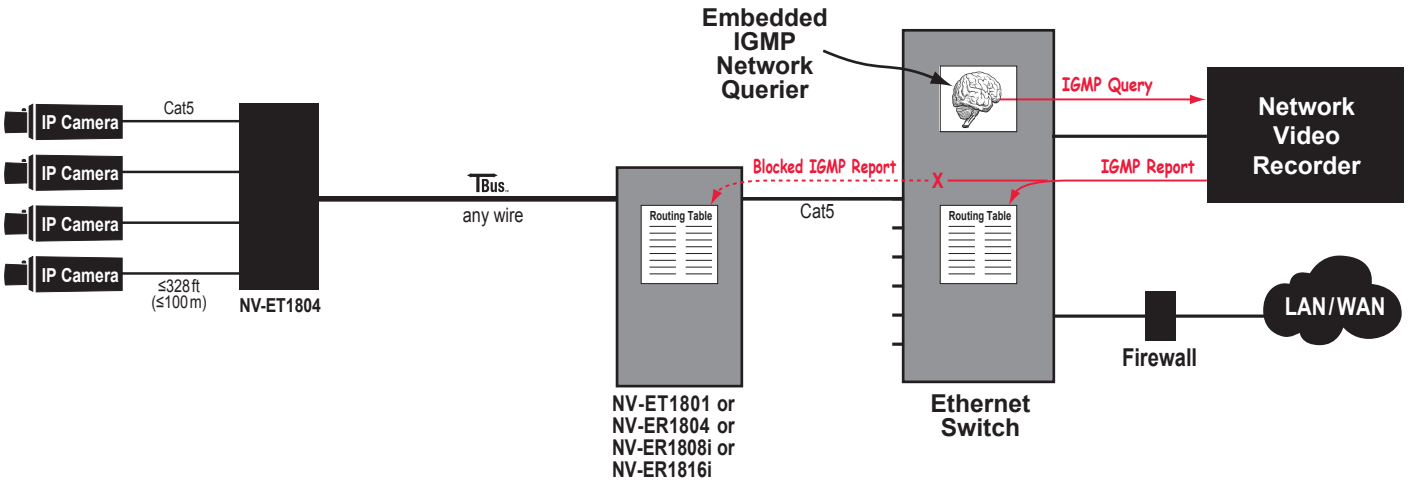

Figure 2 - IGMP Multicast Control

On rare occasions, a customer will experience a problem where a camera sending unicast packets performs flawlessly, but the TBus transceivers "fail" to deliver multicast streams.

Because the TBus devices are delivering data amongst each other in a distributed bus architecture, they need to be told where to send which multicast streams. The TBus transceivers count on the switch(es) to deliver that information.

Sometimes switches have been configured in a way that assumes the TBus transceivers are edge devices (such as PCs or IP cameras). In the interest of saving bandwidth, they do not forward the IGMP control information. Without knowledge of any request for a multicast stream, the TBus transceivers dutifully block that traffic.

Switches and routers (and NVT devices) do not routinely deliver multicast traffic to all destinations. That could overload the network. Instead they rely on a special control protocol to identify and report which recipients (such as the VMS/NVR) are requesting which multicast streams.

That protocol is called Internet Group Management Protocol (IGMP).

How does IGMP Work?

A "Querier" control resource is implemented on one network host, such as a switch or router. Virtually all routers and most switches are equipped with this capability. If there are multiple hosts, the one with the lowest IP address is elected to perform this Querier function.

The Querier is responsible for sending IGMP Queries to the entire network, typically once every three minutes. Any device, such as the VMS/NVR, that wishes to receive a particular multicast stream responds to this Query by generating an IGMP Report that is sent in the direction of the camera. That Report is monitored and passed on by switches and routers within the network. That monitoring is called IGMP Snooping.

These switches and routers each keep their own Routing Table and use it to determine which ports should and should not receive each multicast stream. It would be inappropriate for the switch to send a multicast stream everywhere, as it would clog the network.

The TBus transceivers are not point-to-point devices. They join together to function as a distributed switch. Like a switch, they listen for IGMP Reports and block unknown multicast packets. This is particularly important in a multi-camera environment, as we do not want the stream from one camera being delivered to all other cameras. That could generate too much traffic.

Switches and routers forward the IGMP Reports on to other switches. However in the interest of not forwarding unnecessary traffic, many switches do not forward these reports to 'Client Ports', such as PCs.

If the TBus transceivers do not receive IGMP Reports, then they will BLOCK UNKNOWN MULTICAST PACKETS, and the multicast video will not pass through.

Solutions

There are several ways to fix this: Running unicast only; Influence the IT department to re-configure the switch; Operate a separate "security" network; or manually populate the NV-ER1816i Receiver hub's table-entry list for multicast group addresses. (See page 21.)

Contact NVT for more information.

WIRE TYPE AND POWER DISTANCE

The distance capability of wire is dependant on its ability to deliver DC power, and separately, to deliver high-frequency data signals.

The graph below shows maximum power delivery when using a 56V power supply. If you are locally powering your camera (or other remote device), then this graph does not apply. The graph on the next page shows the maximum data delivery rate.

A Distance Calculator can be found at www.nvt.com.

PoE devices require a minimum of 43V to operate. With a 56V supply, we have up to 13V of allowable voltage drop on the wire.

The voltage will dip in proportion to the remote (camera) load. The graph below shows what PoE power distances are supported for various loads and wire types.

- Start with the camera wattage at the left. Sometimes IP cameras are listed as to their PoE Class rather than wattage.
- Now read over to the right until you find your kind of wire. Then look up (feet) or down (meters) to find your maximum distance.
- If your wire is not among the examples, simply measure its total resistance and find the value on the right side of the graph. The maximum supported wattage is on the left.

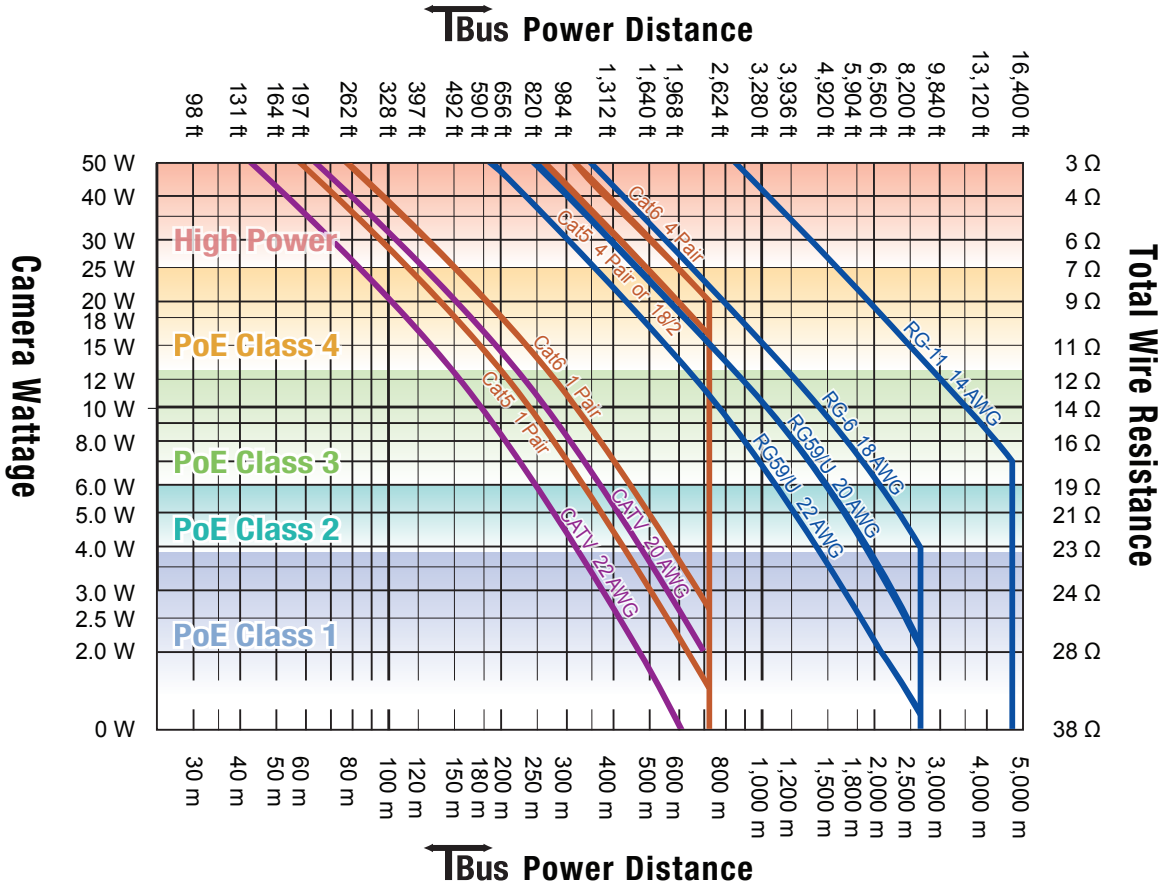

Figure 3 - Power Distance

Network Video Technologies
(+1) 650.462.8100 • +44 (0) 208 977-6614
nvt.com • info@nvt.com

DATA DISTANCE

There are a wide variety of wire qualities, from copper-plated steel at the low end (CATV wire) to high performance low-loss pure copper.

The graph below will help you to determine your data thoughput as a function of wire type and distance.

A Distance Calculator can be found at www.nvt.com.

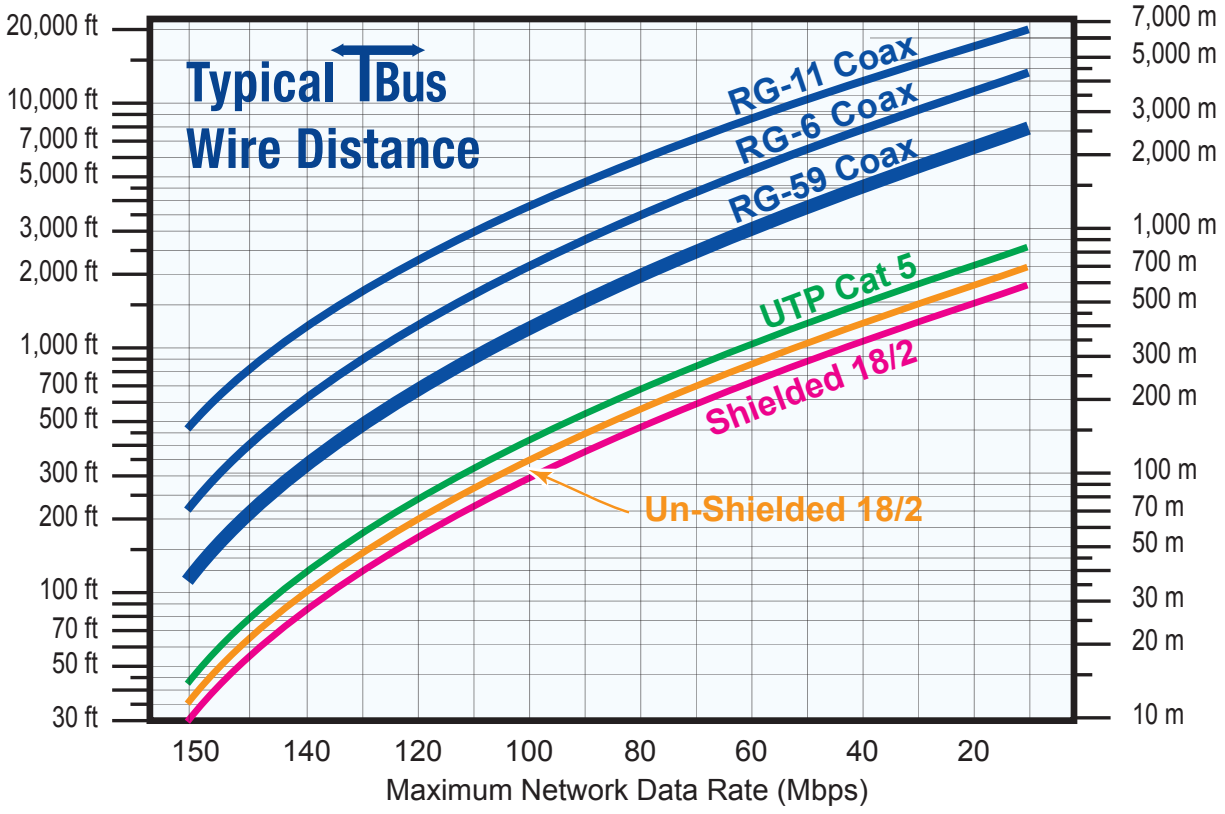

Figure 4 - Data Distance

Network Video Technologies
(+1) 650.462.8100 • +44 (0) 208 977-6614
nvt.com • info@nvt.com

APPLICATION EXAMPLES

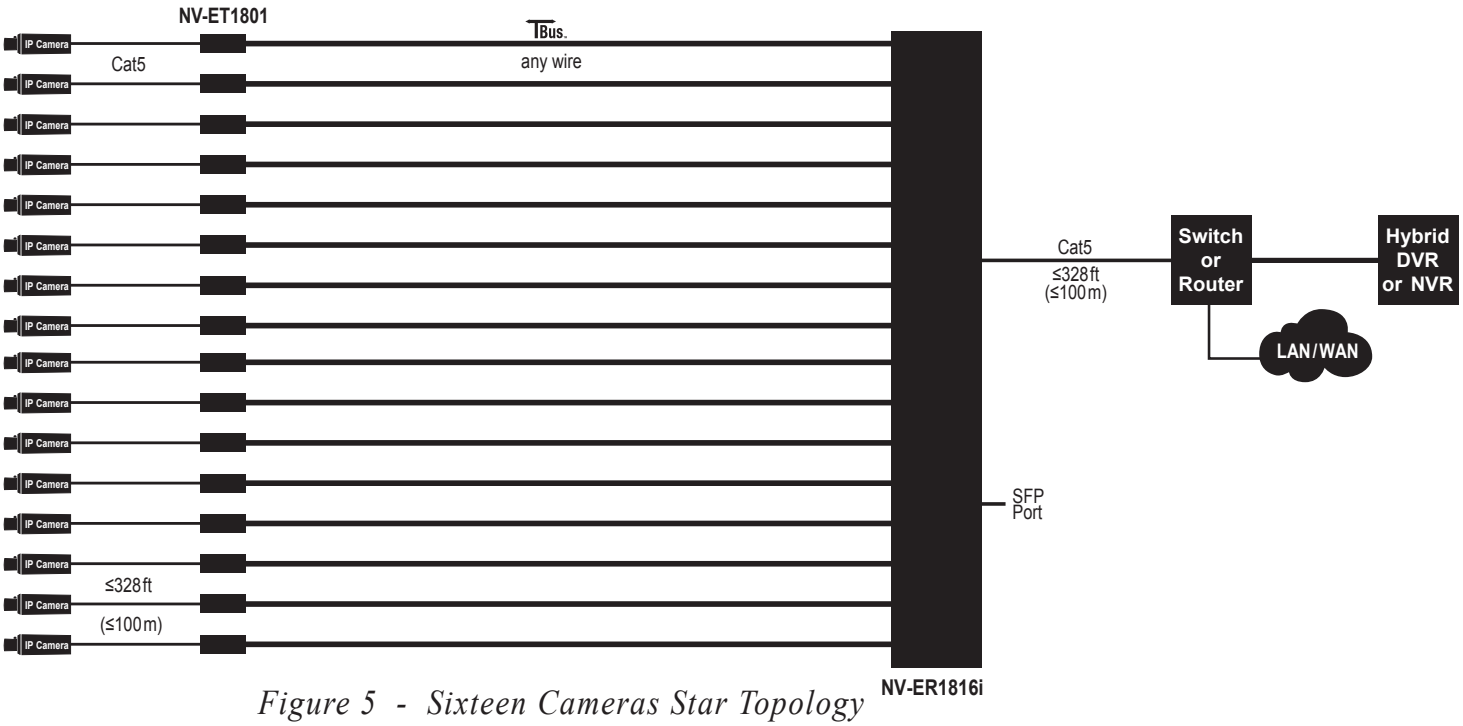

Figure 5 - Sixteen Cameras Star Topology

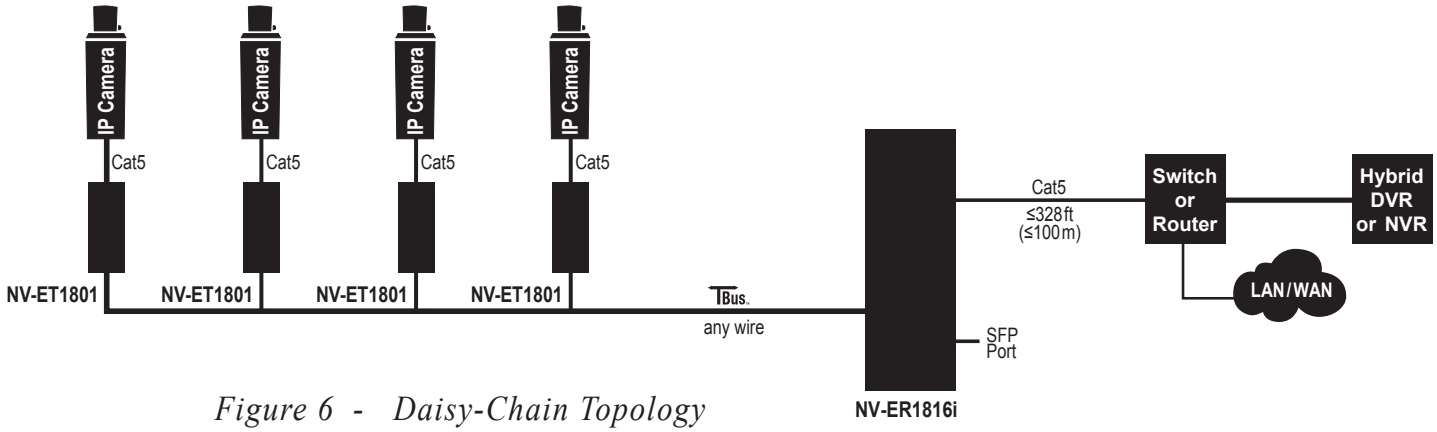

Figure 6 - Daisy-Chain Topology

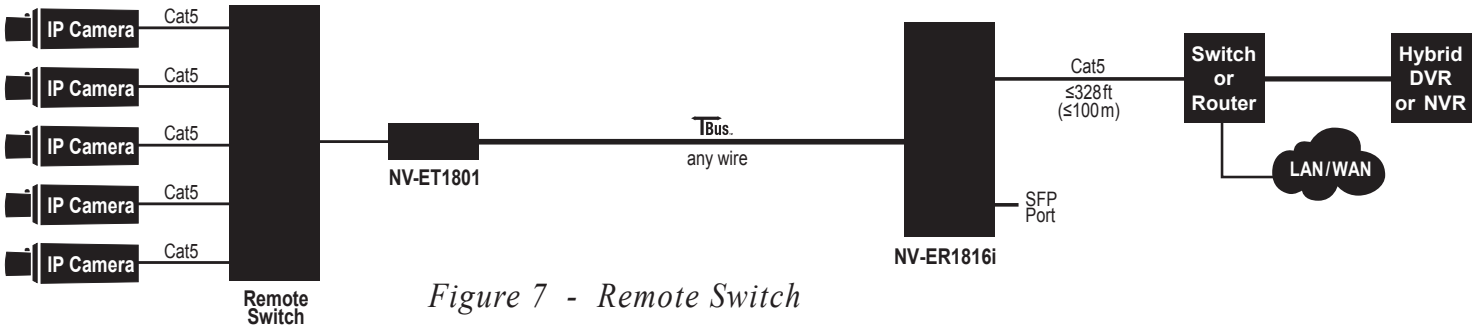

Figure 7 - Remote Switch

APPLICATION EXAMPLES

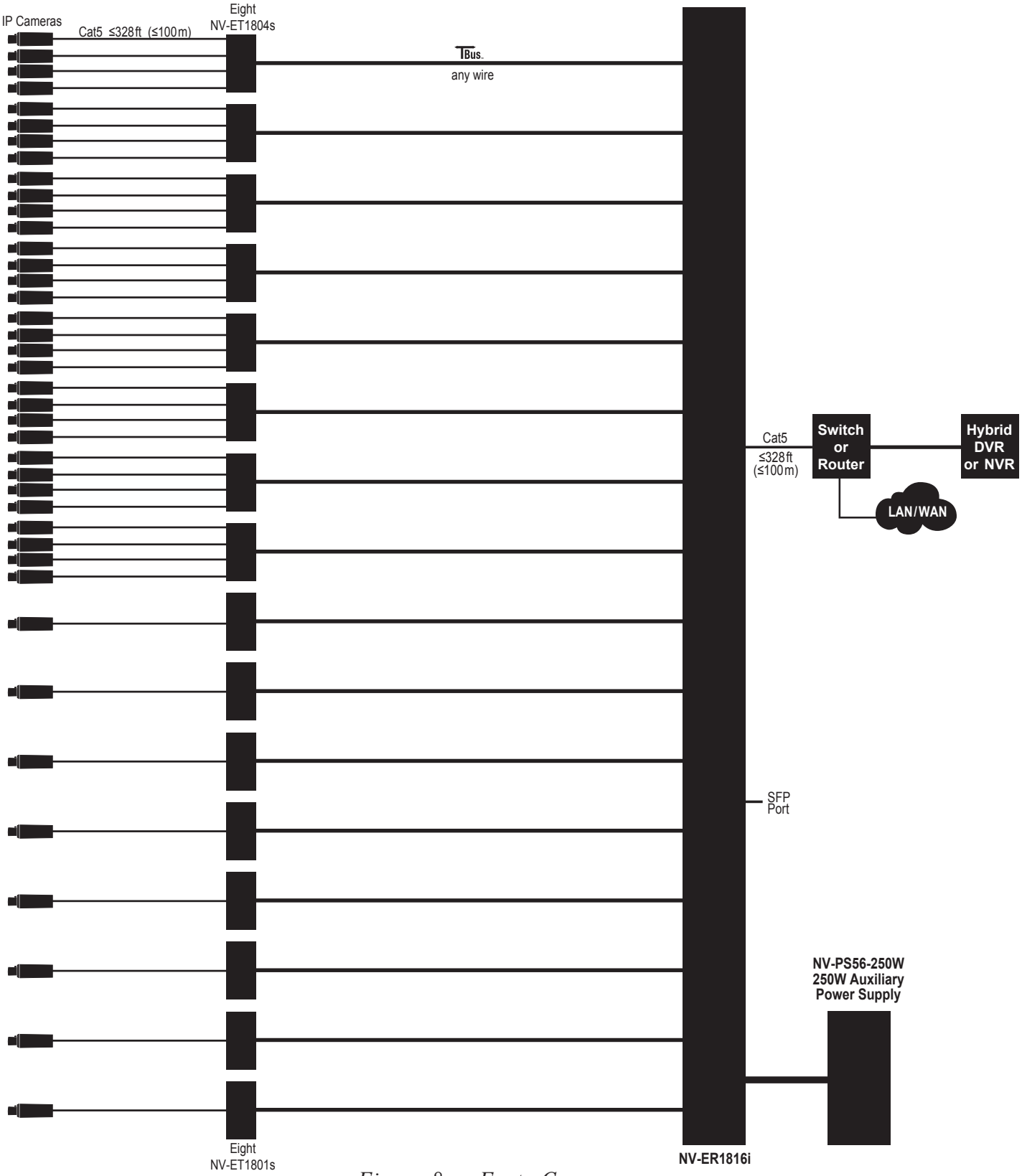

Figure 8 - Forty Cameras

MORE APPLICATION EXAMPLES

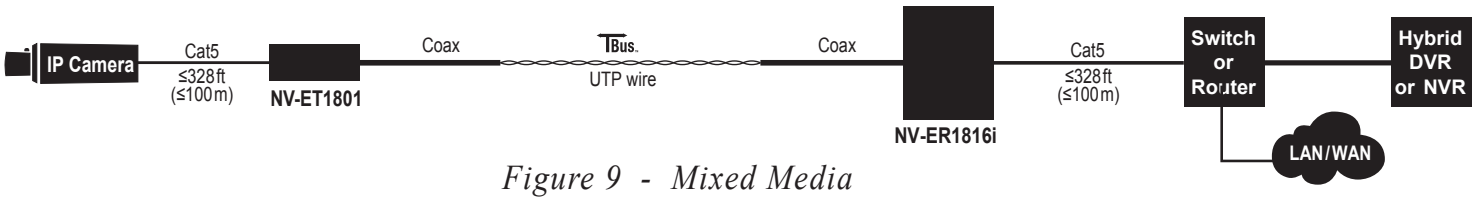

Figure 9 - Mixed Media

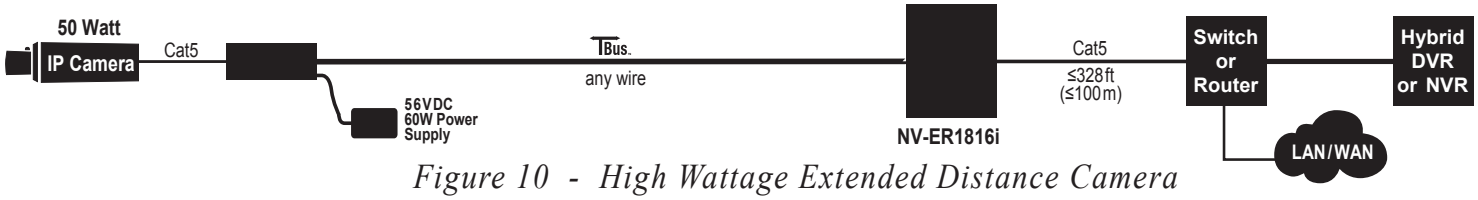

Figure 10 - High Wattage Extended Distance Camera

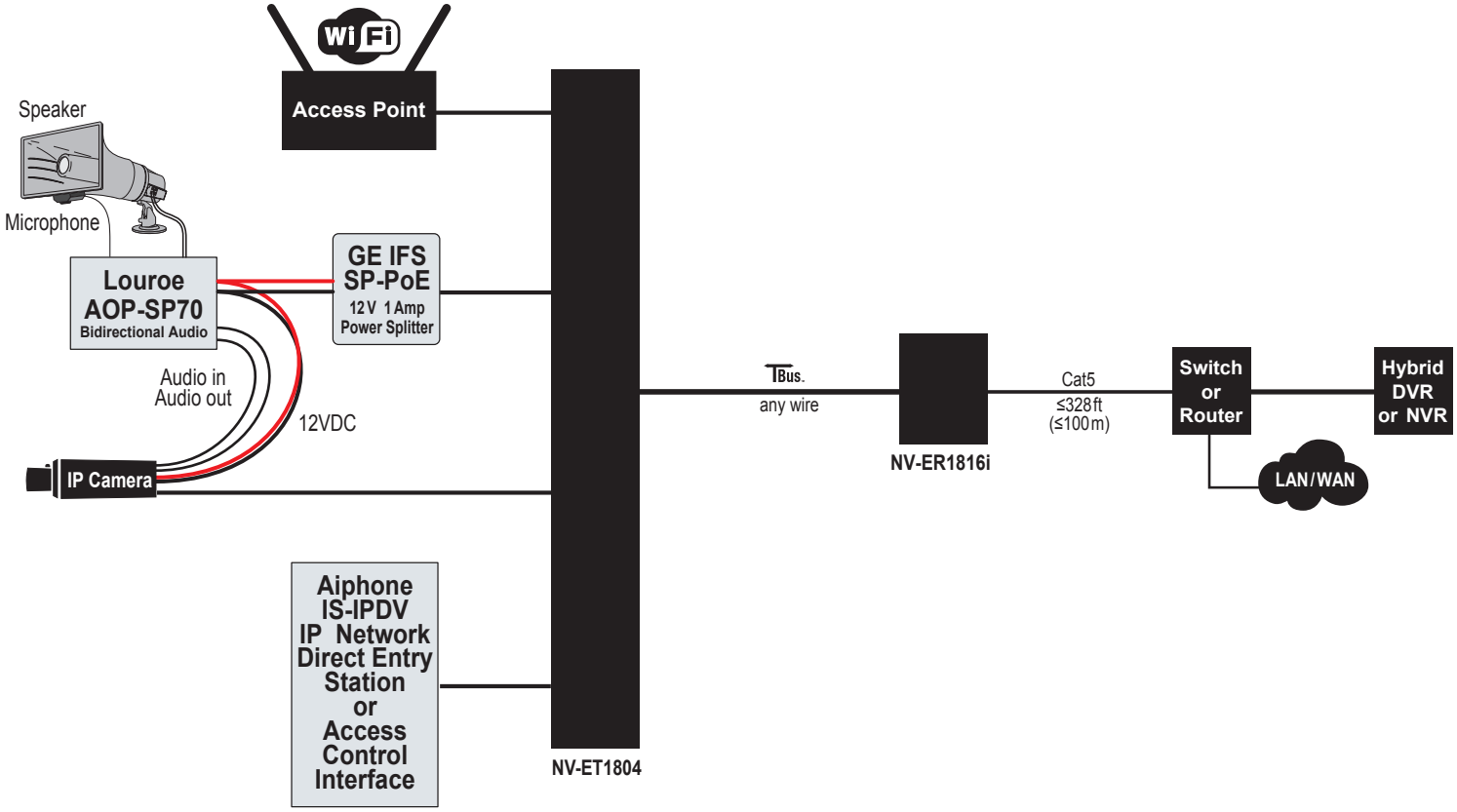

Figure 11 - Door Entry Devices

BACKBONE CONNECTIVITY EXAMPLES

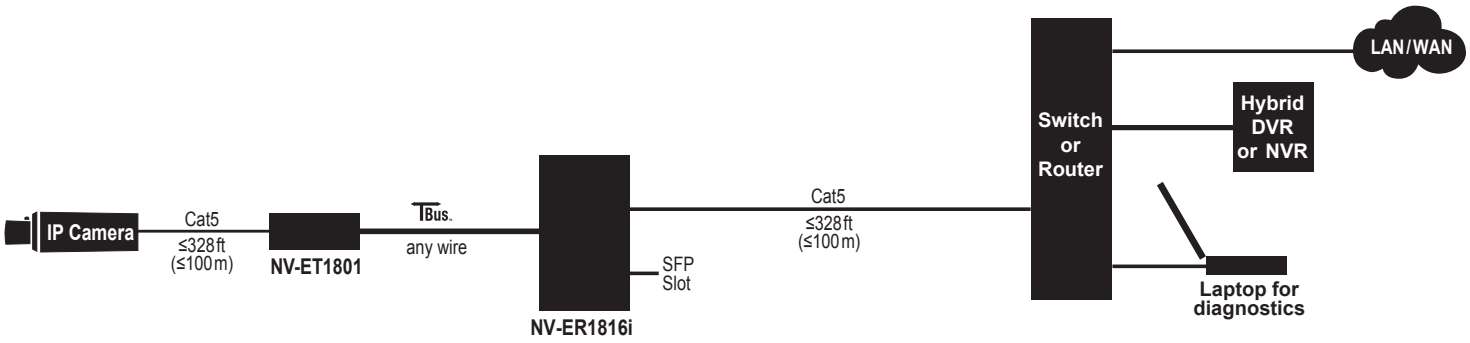

Figure 12 - Typical usage

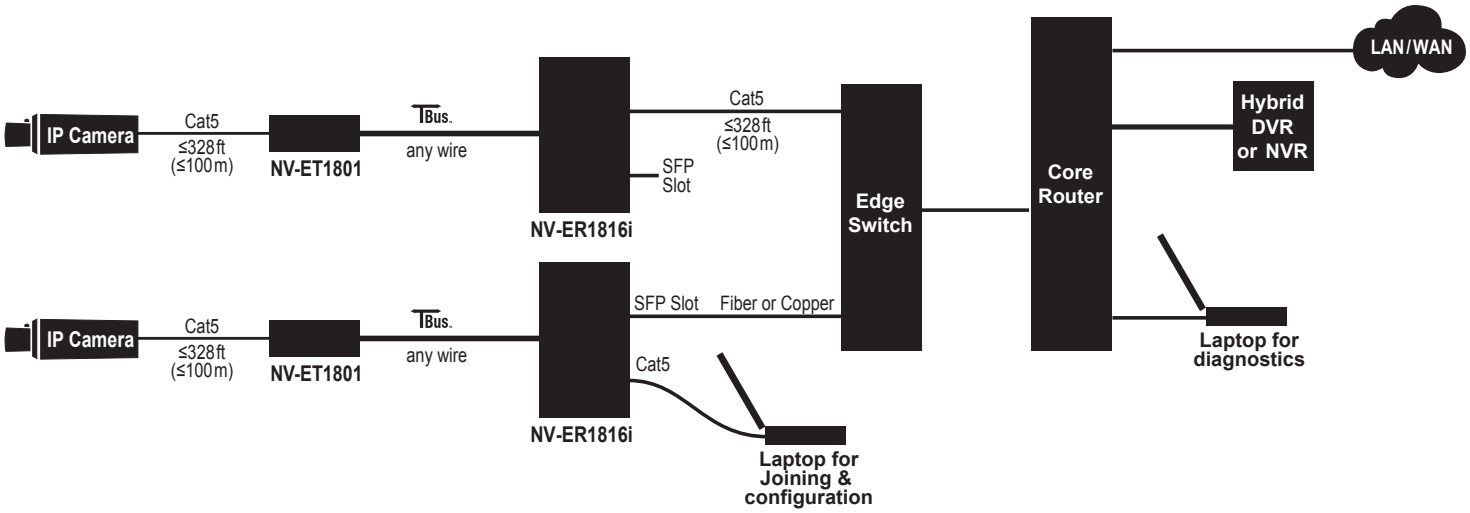

Figure 13 - Large systems

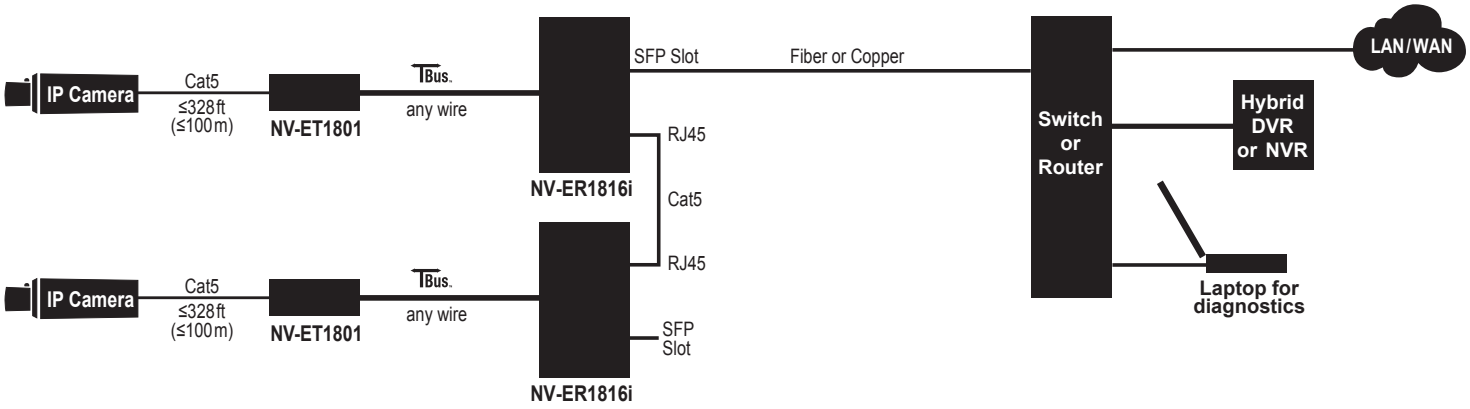

Figure 14 - Daisy-chaining

Network Video Technologies
(+1) 650.462.8100 • +44 (0) 208 977-6614
nvt.com • info@nvt.com

REDUNDANT & HIGH POWER CONNECTIVITY

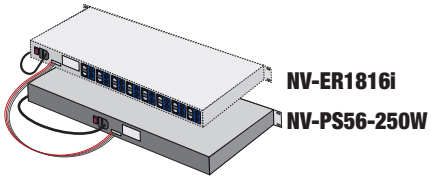

Figure 15 - Single NV-1816i

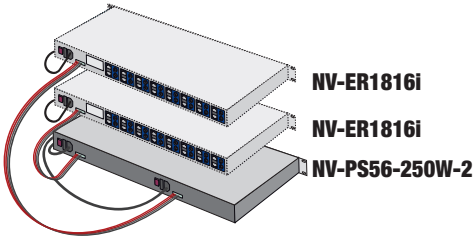

Figure 16 - Dual NV-1816i

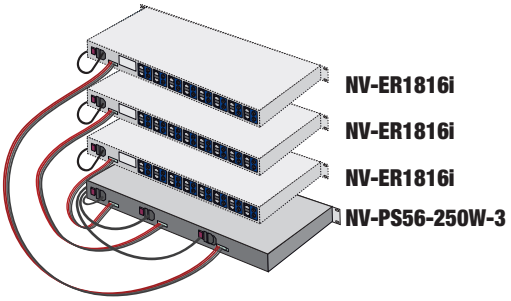

Figure 17 - Triple NV-1816i

DUAL POWER DETAILS

The 56VDC power from the NV-PS56-250W is delivered to the NV-ER1816i Hub via terminal blocks on the rear of both units.

Augmented Power Under normal conditions, the load is shared equally between the Internal and the Auxiliary power supplies. The available power for remote devices is the sum of that of the Hub's internal power supply plus that of the Auxiliary Power Supply, less the power needed to operate the Hub. [250W + 250W - 30W = 470W] When calculating total network power, one must also include 3 watts for each remote transmitter, as well as power dissipated in the wire.

Redundant Power The same Auxiliary Power Supply may be used in the same topology for redundant power operation.

Each power supply is expected to be able deliver all power needed to operate the Hub and its remote devices. The available power for remote devices is that of the power supply less the power needed to operate the Hub. [250W - 30W = 220W]. Again, when calculating total network power, one must also include 3 watts for each remote transmitter, as well as power dissipated in the wire.

MULTI-OUTPUT POWER SUPPLIES

The NV-PS56-250W Auxiliary power supply is available in single, double, and triple configurations within one 1U enclosure. These are:

NV-PS56-250W	Single	250W
NV-PS56-250W-2	Dual	250W
NV-PS56-250W-3	Triple	250W

Each power supply within a multi-output unit is equipped with its own mains inlet, power-cord, 56VDC wiring harness, and rack-mount ears.

Each power supply within a multi-output unit is intended to support one and only one TBus Hub.

⚠ ⚠ WARNING: For safety, never use more than one Auxiliary Power Supply with each NV-ER1816i Receiver Hub.

ALARM OUTPUTS

The NV-ER1816i has optional terminal block connections for alarm output contact closures. Solid-state relay contacts are closed when 56VDC is present. Terminals 5 & 6 report the power supply status of the Internal power supply, while terminals 7 & 8 report the power supply status of the Auxiliary power supply. Maximum 60V, 100mA, 16Ω, 1,000V isolation.

Although Auxiliary power supplies also have these connections, it is recommended that monitoring take place only at the Hub.

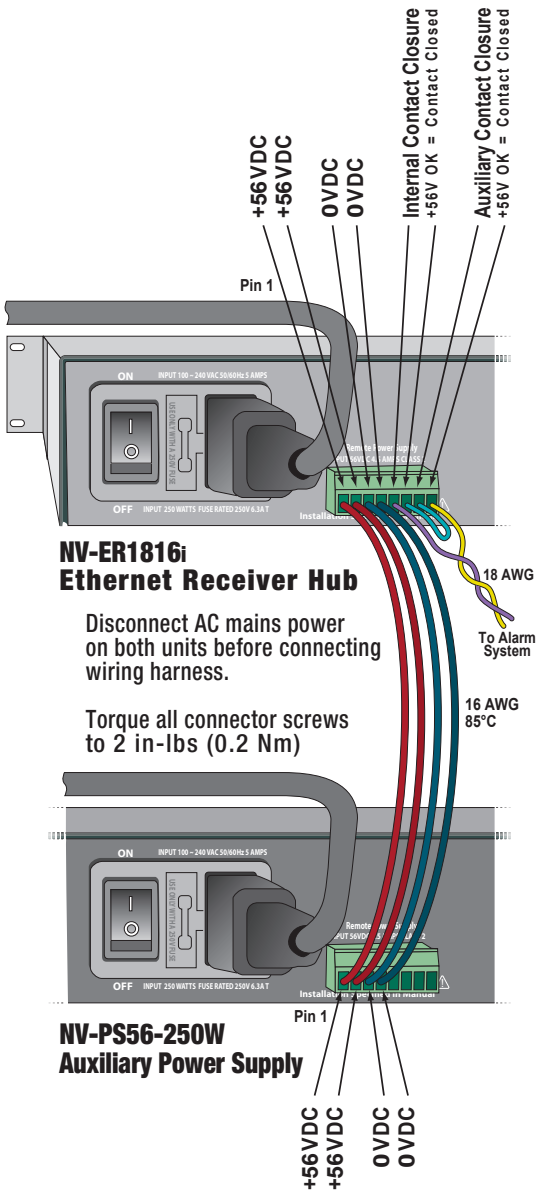

Figure 18 - Interconnections

Network Video Technologies
(+1) 650.462.8100 • +44 (0) 208 977-6614
nvt.com • info@nvt.com

BROWSER-BASED GUI – LOGIN PAGE

Although the NV-ER1816i TBus receiver hub does not require a PC-based user setup or configuration, many additional features are available through this Graphical User Interface (GUI). These features include:

- Remote transceiver Joining
- Per-port load monitoring (watts)
- Per device (MAC address) traffic monitoring
- Receiver hub IP address editing
- Configuration backup/restore
- Receiver hub firmware upgrade

Start by connecting a PC to either any ethernet port:

- an uplink port on the hub itself,
- any LAN connection onto which the hub is connected, or
- any ethernet port on a joined TBus transmitter

Under Network Settings, set your PC's IP address to `192.168.254.100`, and subnet mask to `255.255.255.0`.

Open your web browser, and point it to `https://192.168.254.1`, which is the factory default address of the NV-ER1816i Hub.
For best results, please use the latest version of Internet Explorer, with the latest Javascript, and cookies enabled.
You will receive a security certificate warning. Please confirm this security exception.

The hub's web page will display this:

Figure 19 - Log-in Page

Enter the default username, which is "admin", and your default password, which is also "admin", and click Submit.
Alternately, set a new password per the instructions on the next page.

Network Video Technologies
(+1) 650.462.8100 • +44 (0) 208 977-6614
nvt.com • info@nvt.com

BROWSER-BASED GUI – SET USERNAME & PASSWORD PAGE

To set a new password, use a paper-clip to press the Joining pushbutton on the NV-ER1816i.
That pushbutton is just to the right of the blue power LED:

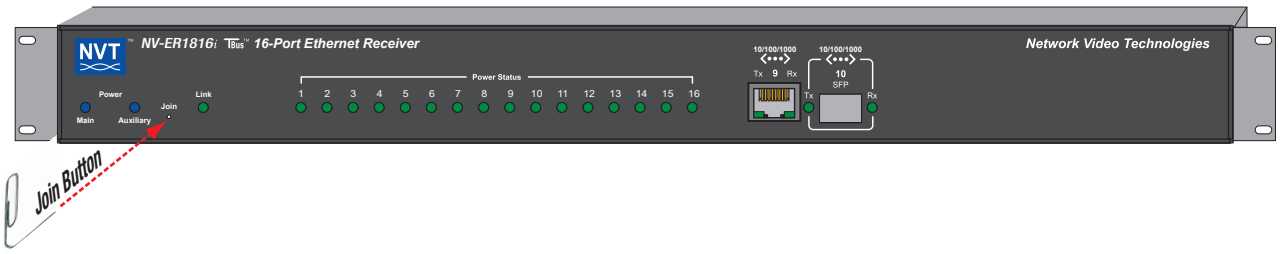

Pres the Submit button, or wait a few seconds. The login screen will change to:

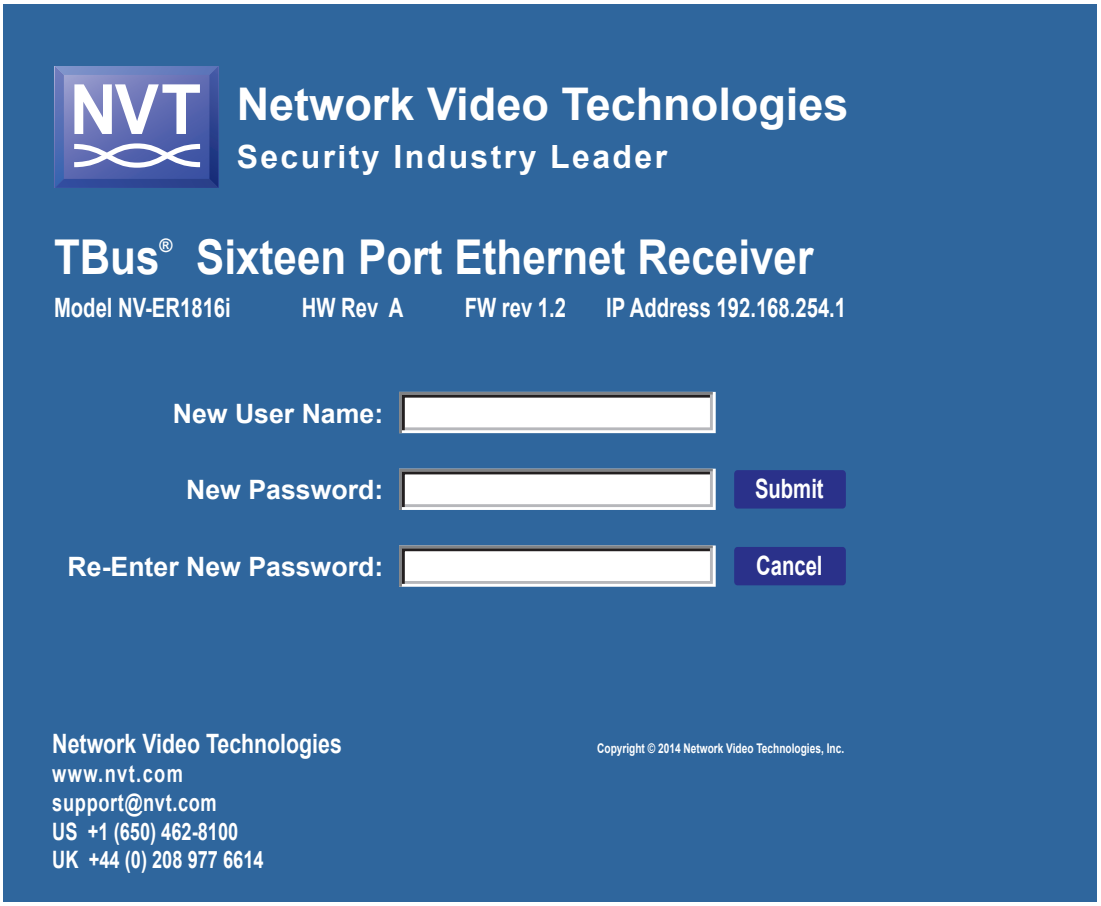

Figure 20 - Set Password Page

Enter your new username and password. Then click Submit. The NV-ER1816i supports one username and password.

BROWSER-BASED GUI – JOINING PAGE

Upon successful login, you will see the Joining page. This page allows the hub to enter Joining mode without having to depress the front-panel Joining button. This can be particularly useful if you are at a distant camera and need access to both ends to join a new TBus transmitter. Temporarily connect the hub to a network accessible via smartphone-based browser. For details on Joining, see page 3.

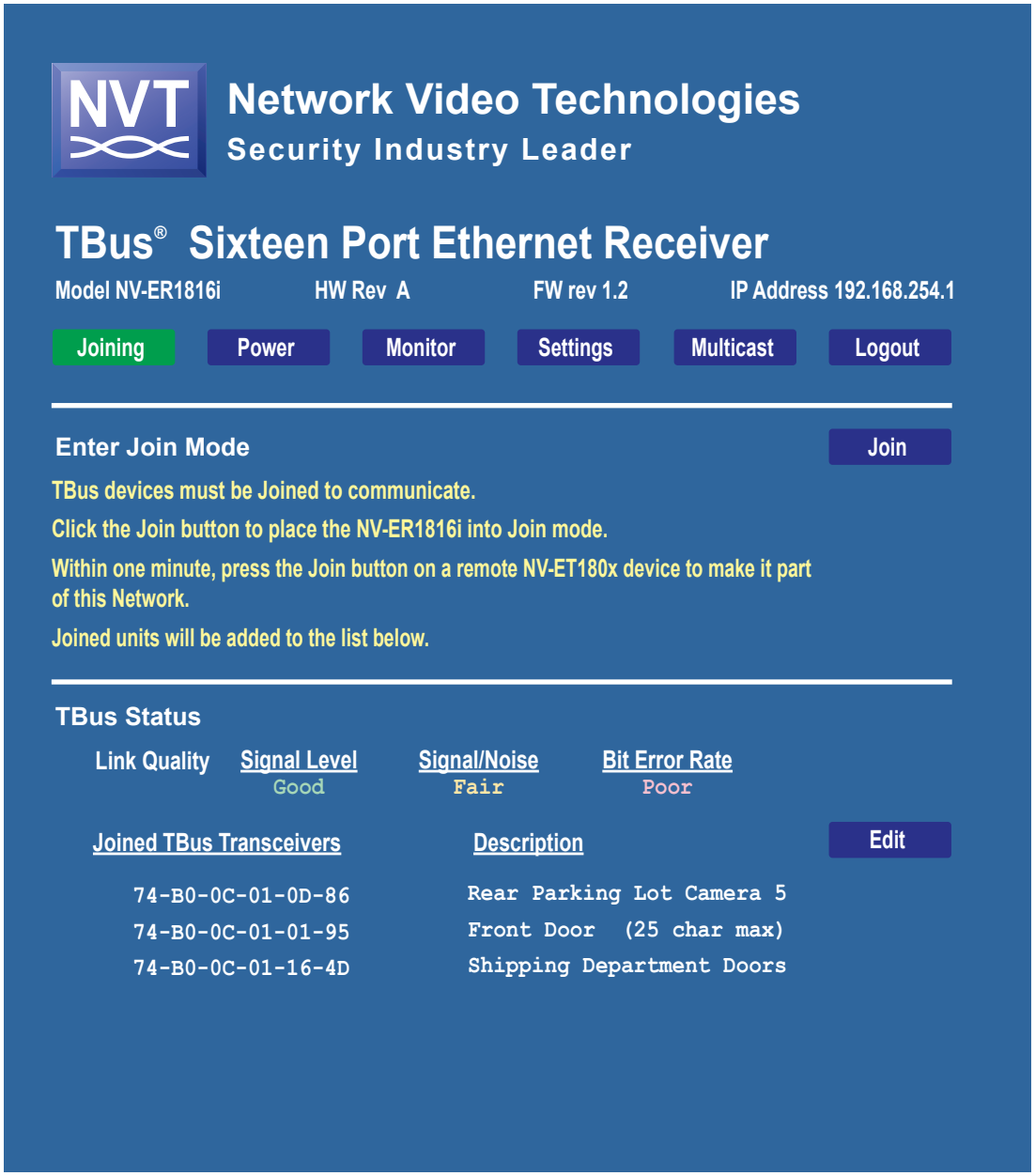

Figure 21 - Joining Page

As a diagnostic tool, the Joining page of the NV-ER1816i will display a list of the MAC addreses of all joined transmitters that are found on the TBus network. For optional easy identification, a naming description field is available. The hub will remember each entered description associated with every transmitter MAC address. This memory is non-volatile.

Network Video Technologies
(+1) 650.462.8100 • +44 (0) 208 977-6614
nvt.com • info@nvt.com

Click the Power button and you will see the status of:

- Power supply voltage
- TBus power consumption by port
- Aggregate power consumption

Figure 22 - Power Page

Clicking a Reset button will remove 56VDC power from that TBus channel for five seconds.
This feature allows for remote reset of a locked-up camera.
A shut-down TBus port's power conumption bar graph will display as black.

Network Video Technologies
(+1) 650.462.8100 • +44 (0) 208 977-6614
nvt.com • info@nvt.com

BROWSER-BASED GUI – TRAFFIC PAGE

Click the Monitor button to read the status of the Uplink ports. This page also displays the detected MAC address of each remote device (camera) as well as its associated TBus Transmitter.

Click EDIT to enter or update the text field associated with each remote TBus Transceiver.

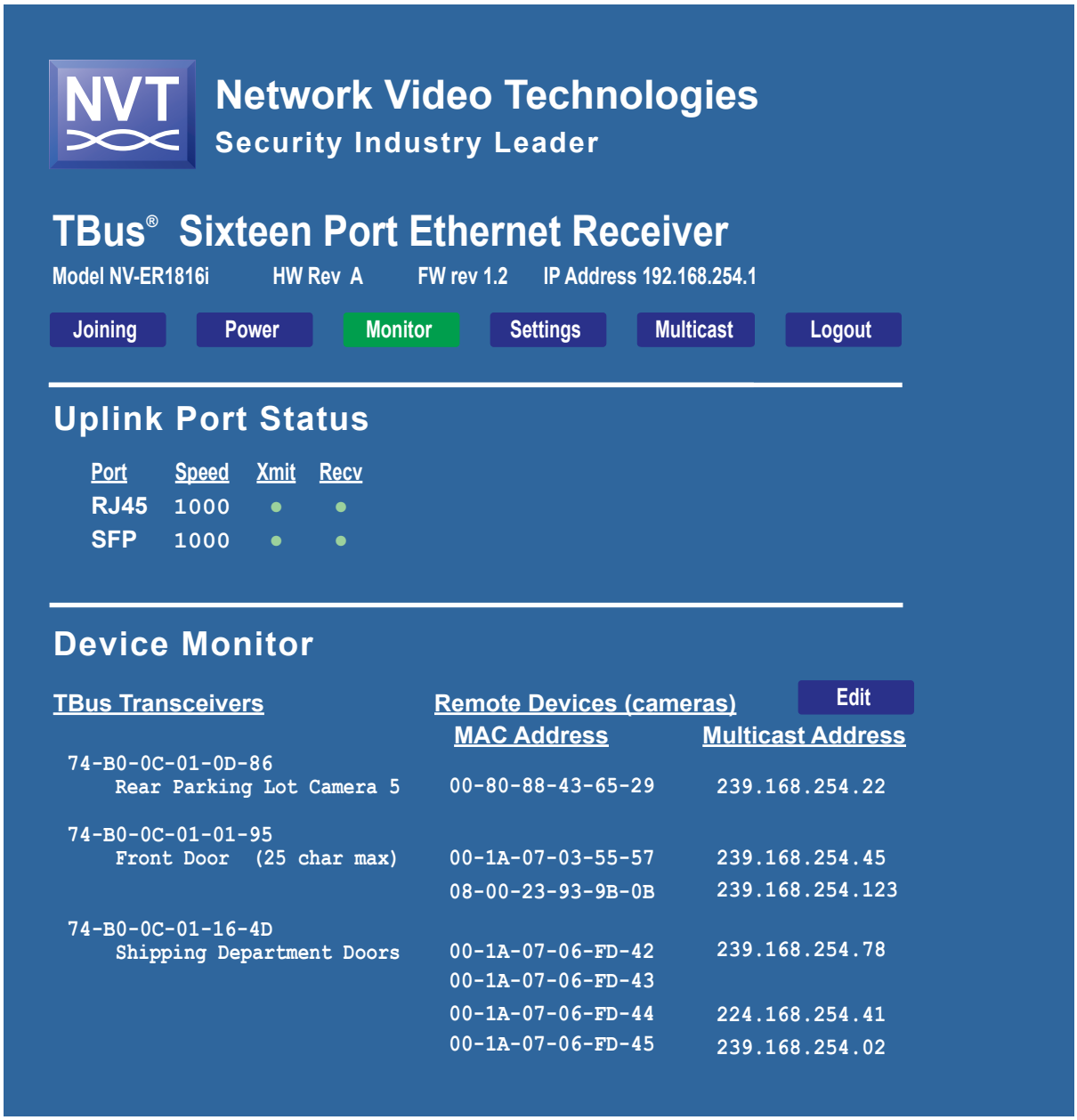

Figure 23 - Monitor Page

Network Video Technologies
(+1) 650.462.8100 • +44 (0) 208 977-6614
nvt.com • info@nvt.com

Click the Settings button to:

- Change Network settings
- Backup or restore configuration
- Upgrade firmware

Network Settings

To change the IP address of the NV-ER1816i hub, enter its new IP address, and subnet mask (typically 255.255.255.0), and click Submit.

Reminder #1: Once the hub's IP address has been changed, you must point your browser to the new IP address to continue communication.

Reminder #2: Don't forget to document this new IP address somewhere, possibly as a label on the chassis.

Given the static nature of most CCTV LANs, the NV-ER1816i does not support DHCP IP address assignments.

If you have more than one NVT hub on your network, you MUST change the IP address so that no two hubs have the same IP address.

The factory default IP address is 192.168.254.1. Should you need to restore the hub to its Factory Default settings, use a paperclip to hold in the Join button of the NV-ER1816i for 30 seconds.

Back-up & Restore

Once you have entered your configuration information into the NV-ER1816i hub, you may wish to save it as a text-based report.

To do so, select into which folder you want to save this file, and click Backup.

The file will be saved under the name:

`NV-ER1816i_192-168-254-1.doc`.

If you have changed the hub's IP address, that IP address will be reflected in the saved filename.

To restore this data into a new or factory-reset NV-ER1816i, select the correct file using the search path, and click Restore.

Firmware Upgrade

Firmware upgrades will be available from time to time on the nvt.com website.

For security, most CCTV LANs are closed (not accessible to the internet). To avoid this issue, first plug your laptop into an internet-accessible LAN and download the binary/hex upgrade into the PC. Then plug your laptop into the CCTV LAN and select this downloaded file using the Firmware File Search Path. Then click Submit to load this file into the NV-ER1816i.

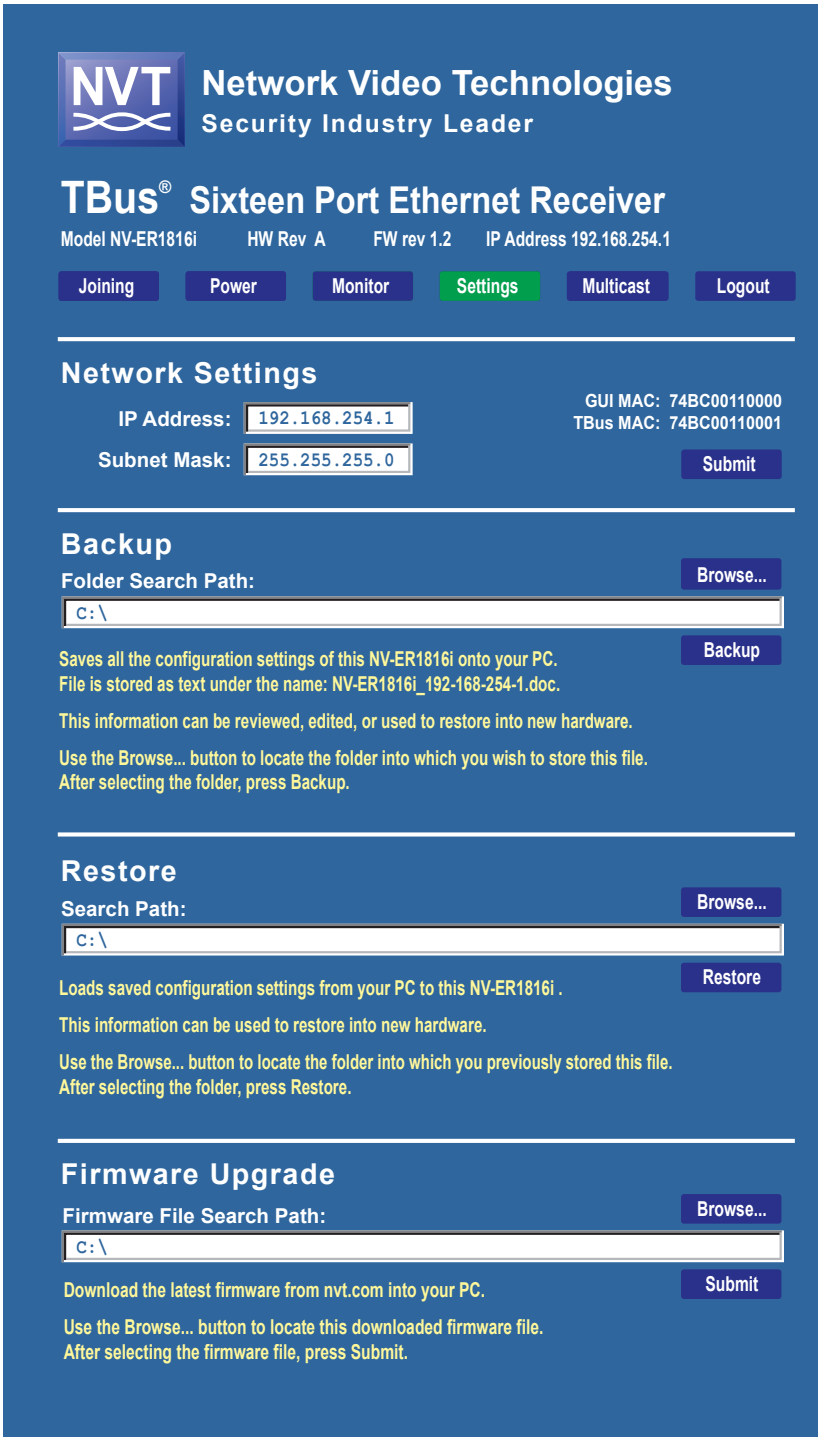

Figure 24 - Settings Page

Network Video Technologies
(+1) 650.462.8100 • +44 (0) 208 977-6614
nvt.com • info@nvt.com

BROWSER-BASED GUI – MULTICAST PAGE

Click the Multicast button to read or edit settings for multicast transmision:

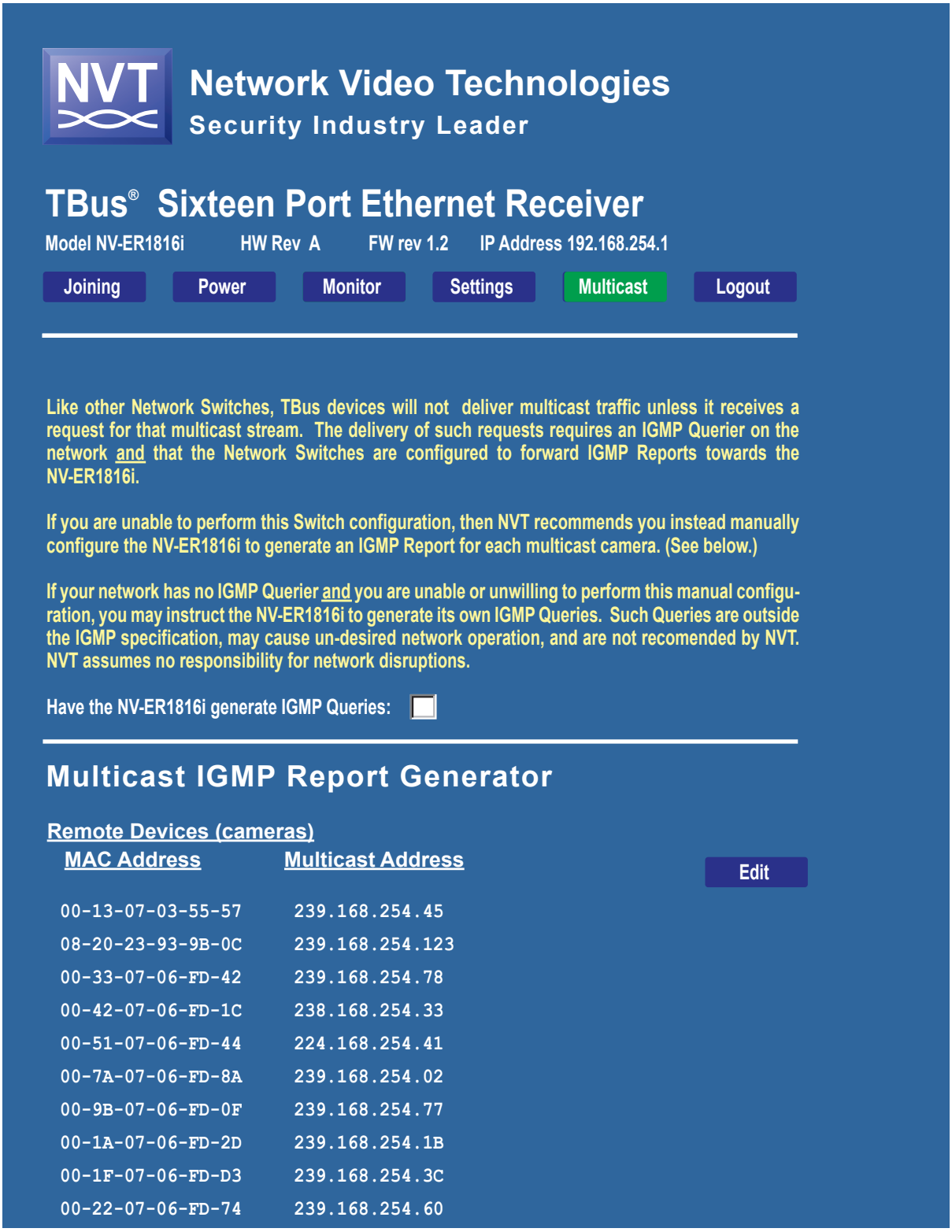

Figure 25 - Monitor Page

Network Video Technologies
(+1) 650.462.8100 • +44 (0) 208 977-6614
nvt.com • info@nvt.com

1800 SERIES PRODUCTS

NV-ET1801	Single port transmitter	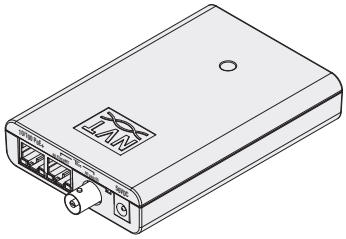
NV-ET1804	Four port transmitter	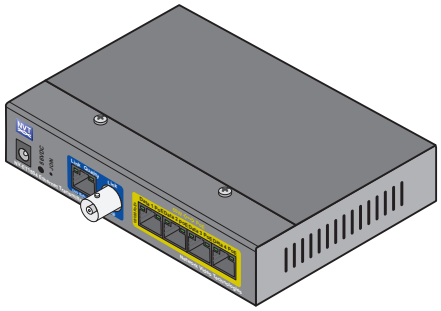
NV-ER1804	Four port receiver	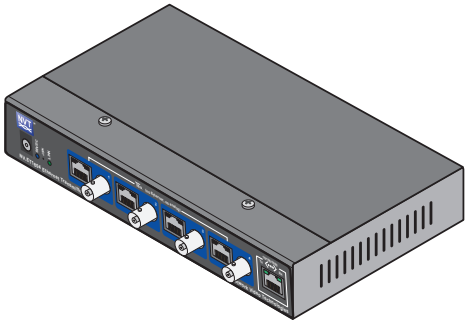
NV-ER1808i	Eight port receiver hub	
NV-ER1816i	Sixteen port receiver hub	
NV-PS56-250W	Auxiliary 56V 250W Single Power Supply	
NV-PS56-250W-2	Auxiliary 56V 250W Dual Power Supply	
NV-PS56-250W-3	Auxiliary 56V 250W Triple Power Supply	

Network Video Technologies
(+1) 650.462.8100 • +44 (0) 208 977-6614
nvt.com • www.nvt.com/email

1800 SERIES ACCESSORIES

NV-PS56-60W	56V DC power supply, 60 watts with IEC line cord	
NV-PS56-90W	56V DC power supply, 90 watts with IEC line cord Do not use with NV-ER1816i	
NV-BNCT	BNC “T” adaptor	
NV-EC4BNC	1:4 BNC splitter adaptor	
NV-BNCA	BNC Screw terminal adaptor	
NV-RJ45A	RJ45 Screw terminal adaptor	
NV-PC4PR	RJ45 Patch Cord, 4-pair 3’ (1m) Grey	

Network Video Technologies
(+1) 650.462.8100 • +44 (0) 208 977-6614
nvt.com • www.nvt.com/email

TECHNICAL SPECIFICATIONS

ETHERNET (Uplink) INTERFACES

SFP Port:	Gigabit Ethernet
RJ45 Port:	10/100/1000 BaseT IEEE 802.3ab auto-negotiation, auto MDI / MDX crossover
Protection:	Industrial transient protection
Wire type:	Cat5 or better
Distance:	up to 328 feet (100m)

TBus LINK INTERFACE

Connectivity: Sixteen ports, each equipped with a BNC and RJ45

Power Source:	Each port delivers class 2 (SELV) power 56VDC at up to 1 amp, to power remote NVT transmitters and their PoE devices.
Wire type:	Coax, single- or multi-pair UTP, 18/2, or STP wire
Impedance:	25 to 100 Ω
Topology:	Bus architecture supports star, daisy-chain, or any combination. One control-room Receiver may support multiple remote TBus Transmitters.
Data throughput:	150 Mbps total network bandwidth* with dynamic bandwidth allocation
Latency:	3 mS
Wire distance:	Up to 8,000 feet, 1.5 miles (2.5 Km)*
Transmission technology:	OFDM
Encryption:	128-bit AES, through one-button Joining

IMPORTANT NOTE: Data rate, distance, and number of devices may be lower due to wire voltage-drop, power supply capacity, or signal attenuation. See pages 8 & 9.

⚠ ⚠ WARNING: For safety, never use more than two power supplies within a TBus channel. Never use more than one 60 watt remote power supply on each TBus channel.

ALARM OUTPUTS

Main: Rear screw terminals 5 & 6 open on fault	60V 100mA 16Ω
Auxiliary: Rear screw terminals 7 & 8 open on fault	1,000V isolation

REGULATORY

UL Listed to IEC/UL 60950-1
Complies with FCC part 15A limits

CE
c UL us LISTED

WARRANTY

Limited Lifetime

Specifications subject to change without notice.

LED STATUS INDICATORS

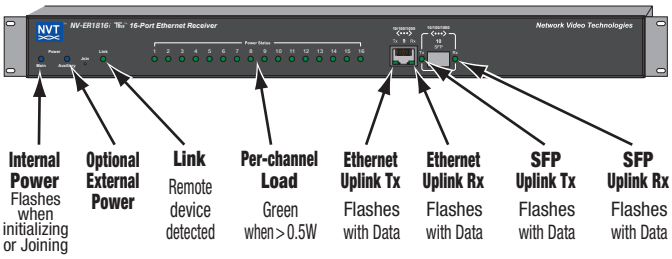

MECHANICAL / ENVIRONMENTAL

Body Dimensions:	17 in (432 mm) wide 1.73 in (44 mm) high 10 in (254 mm) deep excluding connectors and rack ears
Shipping weight:	10.37 lbs (4.70 Kg)
Operating / storage temperature:	-40°F to +122°F (-40°C to +50°C) 20 to 85% relative humidity non-condensing

Generated heat

Under full 220W load, hub alone:	250 BTU/hour
Under full 220W load, including remote transceivers & cameras:	1,100 BTU/hour
Under full 470W load, including remote transceivers & cameras: (470 W load requires auxiliary NV-PS56-250W power supply)	2,200 BTU/hour
Transient immunity:	5 x 20µS 3,000A, 6,000V ESD 20KV, 200pF

POWER SUPPLY

The NV-ER1816i contains a 250 watt 56VDC power supply that operates off 100 to 240 VAC, 50/60 Hz. Current draw can be up to 4.5 amps. The NV-ER1816i consumes up to 30 watts, leaving 220 watts for the sixteen TBus ports.

Fuse rating: 250V 5A T

Use only the power cord provided with the unit or equivalent UL approved type SPT-2, SVT, or SJT 18/3 AWG 100~240 VAC, 1 Amp 60°C max 15 ft (4.5 m) long. One end with IEC380-C13 appliance coupler and the other end with NEMA 1015P or equivalent for your country.

An optional external 250 watt power supply may be added for high load applications, or for redundancy, bringing the total power to 500 watts. The external power supply connections use an 8-conductor pluggable Phoenix-style connector suitable for up to 16AWG (1.3 mm) conductors. Screws should be torqued to 2 in-lbs (0.2 Nm).

Only one external 250 watt power supply may be used with each NV-ER1816i. For multi-hub environments, up to three power supplies are available in a shared 1U enclosure:

Single External Power Supply Model NV-PS56-250W	56V 250W
Dual External Power Supply Model NV-PS56-250W-2	Dual 56V 250W
Triple External Power Supply Model NV-PS56-250W-3	Triple 56V 250W

Network Video Technologies
(+1) 650.462.8100 • +44 (0) 208 977-6614
nvt.com • info@nvt.com

TROUBLESHOOTING

Confirm that the NVT transceivers have been configured to communicate with each other, per instructions on page 3.

If you are experiencing problems, attempt to simplify your setup. Test each cable segment separately. For example, test a simpler configuration first. Then add in the NVT transceivers, back-to-back. Test each segment of a long cable-run independently. Attempt to isolate the problem.

Most IP camera installation problems involve configuring the IP camera and the recorder to recognize each other. If in doubt, connect the camera directly to the Ethernet switch, bypassing the transceivers. Consult the IP camera and/or recorder installation manuals for configuration instructions, or contact the camera or recorder manufacturer.

Which camera and NVT LEDs are on?

Can you ping the camera?

Test if unicast traffic passes smoothly but multicast traffic is blocked. (See page 7.)

NETWORK DIAGNOSTIC TOOLS

NVT has developed a Console Utility that can be downloaded from www.nvt.com. Once installed on any Windows PC, the application-scours the network for NVT devices, and reports each of their MAC addresses, as well as the MAC addresses of any other NVT devices within its joined group.

Additional network tools, such as Packet Sniffers or Traffic generators are available from other sources such as LAN Shark, LANTraffic, etc.

CUSTOMER SUPPORT

NVT customer support is available for consultation from 8:00 AM to 5:30 PM PST Monday through Friday. In addition, emergency after-hours callback support is available.

USA Office: (+1) (650) 462-8100
USA Fax: (+1) (650) 326-1940
UK Office: (+44) (0)20 8977 6614
UK Fax: (+44) (0)20 8973 1855
Email USA: www.nvt.com/email/info
Email UK: www.nvt.com/email/eusales
Web home page: www.nvt.com

PRODUCT RETURNS

Please call before returning units to NVT. Returned materials must have a “Returned Materials Authorization” (RMA) number from NVT marked on the outside of the shipping carton.

LIMITED LIFETIME WARRANTY

NVT warrants that the product conforms to NVT’s applicable published specifications and is free of defects for the life of the product. There shall be no other warranties, express, statuatory, or otherwise, including any implied warranty of merchantability, of fitness, or any other obligation on the part of NVT with respect to any of the products.In the event that any of the products is damaged, altered, or modified without the express written consent of NVT, any warranty for those products will cease and NVT will have no further liability as it pertains to those products.

NVT assumes no responsibility for damages or penalties incurred resulting from the use of this product in a manner or location other than for which it is intended.

NVT’s liability under any warranties shall be discharged by replacing or repairing any part or parts which do not conform to the applicable warranty under normal and proper use. NVT’s liability with respect to any product shall not exceed a refund of the price received by NVT for that product, and in no event shall NVT have any liability for any incidental, consequential, special, or indirect damages.

Some states do not allow the exclusion or limitation of special, incidental, or consequential damages, so the above limitations or exclusions may not apply to you. This warranty gives you specific legal rights, and you may also have other rights which vary from state to state.

FCC USER INFORMATION

This equipment has been tested and found to comply with the limits for a Class B digital device, pursuant to part 15 of the FCC Rules. These limits are designed to provide reasonable protection against harmful interference in a residential installation. This equipment generates, uses, and can radiate radio frequency energy and, if not installed and used in accordance with the instructions, may cause harmful interference to radio communications. However, there is no guarantee that interference will not occur in a particular installation. If this equipment does cause harmful interference to radio or television reception, which can be determined by turning the equipment off and on, the user is encouraged to try to correct the interference by one or more of the following measures:

- Reorient or relocate the receiving antenna.
- Increase the separation between the equipment and the receiver.
- Connect the equipment into an outlet on a circuit different from that to which the receiver is connected.
- Consult the dealer or an experienced radio/TV technician for help.

WARNING
Changes or modifications not expressly approved by the manufacturer could void the user’s authority to operate the equipment.

Network Video Technologies
(+1) 650.462.8100 • +44 (0) 208 977-6614
nvt.com • info@nvt.com

Copyright © 2014 NVT, Inc.
453-1816-1-A1
2014/01